NO. 76 NOTES FROM THE SHOP $3.95

Woodsmith®

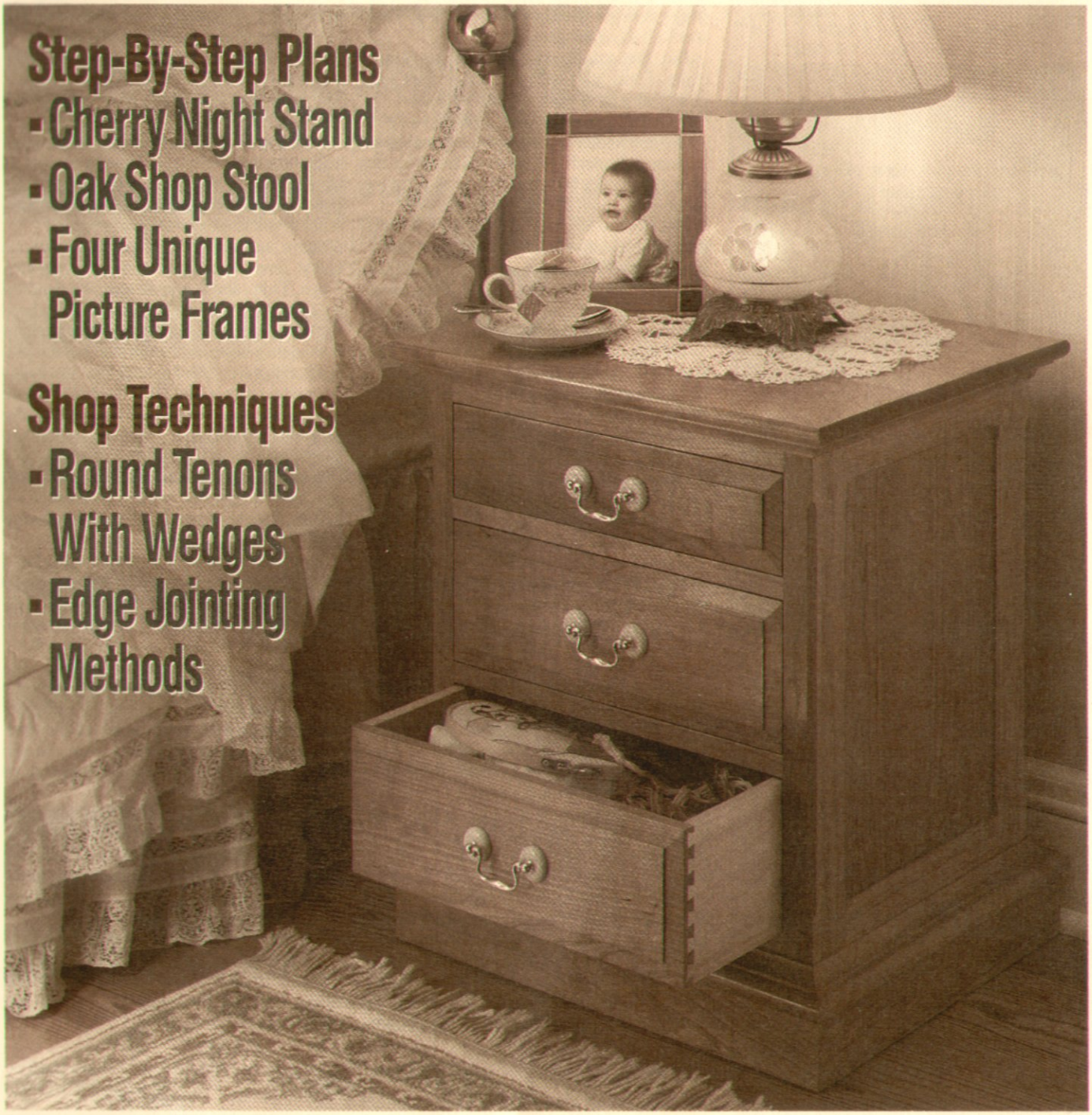

Step-By-Step Plans
- Cherry Night Stand
- Oak Shop Stool
- Four Unique Picture Frames

Shop Techniques
- Round Tenons With Wedges
- Edge Jointing Methods

No. 76 August, 1991

Woodsmith®

Editor Donald B. Peschke
Design Director Ted Kralicek
Managing Editor Douglas L. Hicks
Associate Editor Terry J. Strohman
Assistant Editors James M. Dolan, Richard S. Peters, Gordon Gaippe
Project Designer Ken Munkel
Illustrators David Kreyling, Cary Christensen, Rod Stoakes, Chris Glowacki, Dirk Ver Steeg, Kurt Schultz
Circulation Director Liz Bredeson
Subscription Manager Sandy Baum
Newsstand Sales Kent A. Buckton
Shop Manager Steve Curtis

WOODSMITH CATALOG
Marketing Director Robert Murry
Graphics Director Jon Snyder
Project Supplies Leslie Ann Gearhart, Linda Jones
Warehouse Jerry Carson, Supv., Gloria Sheehan, Ronald Long, David Stout
Customer Service Mgr. Linda Morrow
Customer Service Jennie Enos, Genelle Branson, Mic Smith, Roberta Rush, Joy Johnson, Lori Seibert

CORPORATE SERVICES
Controller Paul E. Gray
Bookkeeping Linda O'Rourke
Network Administrator Douglas M. Lidster
Sourcebook Jean Myers
Administrative Asst. Cheryl A. Scott, Jozlyn Pross
Building Maintenance Ken Griffith, Archie Krause

STORE MANAGERS
Des Moines, IA Kent Welsh
Berkeley, CA Michael DeHaven

Woodsmith® (ISSN 0164-4114) is published bimonthly (Feb., April, June, Aug., Oct., Dec.) by Woodsmith Publishing Company, 2200 Grand Ave., Des Moines, IA 50312. Printed in U.S.A.
Woodsmith® is a registered trademark of Woodsmith Publishing Company.
©Copyright 1991 by Woodsmith Publishing Company. All rights reserved.
Subscriptions: Single copy: $3.95. One year subscription (6 issues), $17.95. Two years (12 issues), $31.95. (Canada/Foreign $21.95 per year, U.S. funds.)
Second Class Postage Paid at Des Moines, IA and at additional offices.
Postmaster: Send change of address to *Woodsmith*, Box 10718, Des Moines, IA 50350.
Subscription Questions? Call 1-(800) 333-5075, 8:00 am to 5:00 pm, Central Time, weekdays.

EDITOR'S COLUMN

Sawdust

Here's a good question, "I want to get started in woodworking, but I don't know what to build. Have any suggestions?"

I used to think that the best advice was the practical approach, start with a few small projects to get the hang of the basics. Then work up to larger projects.

But that might not be much fun, especially if you start with a small project you don't like just to learn a basic technique.

Why not start out with a project you're really interested in — no matter how big or how complicated it is? Sure you might get in over your head, but you'd learn an awful lot in the process of digging your way out.

But back to the original question. What's a good project to start out on? One possibility is the Night Stand featured on the cover of this issue. You would learn more woodworking techniques with this one project than almost any other I can think of.

To build it, you have to glue up a solid-wood top, make frame and panel sides, and build dovetailed drawers. By changing the design slightly, you could eliminate the bottom two drawers and add a door instead.

In this one small project you have all the basics of cabinetmaking. By the time you were done, you'd have learned a lot.

"Yeah, but you need a lot of tools to build a project like that."

Not really. The majority of work is done with just a table saw and a router. Of course, woodworkers are known for inventing reasons to add tools to their shops. And a project like this one could give you a lot of good reasons.

But sometimes there's fun in determining how to get the job done with the tools you have at hand. For example, to glue the boards for the top of the Night Stand together edge-to-edge, you might think you need a jointer to joint the edges.

But maybe not. You could accomplish this same task with a hand plane, or on a table saw, and there's three or four ways to joint the edges with a router.

EDGE JOINTING. That, in fact, is the basis of the article on edge jointing in this issue. There are times when you need the right tool for the job. But there are also times when the tools at hand can get the job done.

SHOP STOOL. Another good example of this is the Shop Stool in this issue. Let's say you want to build a stool with a round seat that's slightly scooped out to make it comfortable.

That's simple. Mount a blank on the lathe, turn it round, and then turn a recess in the seat. Just like turning a very shallow bowl.

But what if you don't have a lathe?

Okay, if you have a router, you can make a jig that routs out the same shallow recess. The jig is simple to build, and works great. (See page 22.)

NEW FACES. I have a tradition of introducing new people who work here so you get an idea of who all contributes to *Woodsmith*. Unfortunately, I completely forgot to mention Steve Curtis, our shop manager.

Steve actually started working with us about five years ago at the Woodsmith Store. Then about a year ago, we decided that we needed more help in our shop here at the magazine's offices — someone to manage the shop, and build some of the projects and prototypes for projects. Steve also helps the editors and technical illustrators coordinate their efforts as they build the projects for each issue. But most important, sometimes he let's me beat him at golf.

MORE NEW FACES. Now before I forget, I also have to mention several other new additions that are part of our ever-growing mail order catalog division.

First, Robb Murry has joined us to head up this group as marketing director. Robb has had a lot of experience in the woodworking field. (He last worked for RBI, a manufacturer of scroll saws and planers.) Robb will help us organize and expand our mail order service. His main responsibilities are to select products and project supplies for the catalog. (Most of his work will be seen in the next catalog. I'll wait to talk about it because we have some new features in store for the catalog.)

To take your orders and help with any problems you have with your subscription, Roberta and Joy have joined the customer service group. And Lori's voice will probably be the first one you hear if you call our offices; she's our new receptionist.

All in all, that's a lot of growth for our mail order group.

NEXT ISSUE. The next issue of *Woodsmith* will be mailed during the last week of September, 1991.

Don

A LOOK INSIDE

Contents

Tips & Techniques 4 *Useful tips from fellow woodworkers: 1) Easy Vise Mounting. 2) Checking a Miter Gauge. 3) Clamp Cradles. 4) Picture Frame Splines. 5) Router Table Hold-Down. Plus Quick Tips.*

Cherry Night Stand 6 *This classic cherry cabinet is built with traditional joinery. It's an heirloom project that looks as good alongside a sofa as it does next to a bed.*

Desk Picture Frames 12 *We show several ways to dress up a simple frame with decorative strips of wood. The corners are joined by stub tenons that fit into the same grooves as the picture.*

Shop Notes 16 *1) Drill Press Angle Gauge. 2) Drill Press Angled Platform. 3) Routing Inside Chamfers. 4) Trimming Through Tenons.*

Shop Stool 18 *The legs for this oak stool are dowels wedged into round mortises. A scooped seat makes it comfortable in the shop or just about anywhere else.*

Seat Scooping Jig 22 *A shop-made plywood jig helps produce a uniformly-contoured seat for the Shop Stool — or any chair seat.*

Wedged Tenons 24 *A through tenon is stronger when a wedge locks it in the mortise. It's an attractive joint, too, especially if the wedge is made from a contrasting wood.*

Talking Shop 26 *How to avoid glue-joint failure, and what to use for a thin table saw insert. Also, what's the difference between reaction wood and case hardening?*

Edge Jointing Basics 28 *Good edge joints share three characteristics: the edges are straight, smooth, and square to the face. We show the tools and techniques to achieve them.*

Sources 31 *Hardware and project supplies needed for the projects in this issue.*

Cherry Night Stand *page 6*

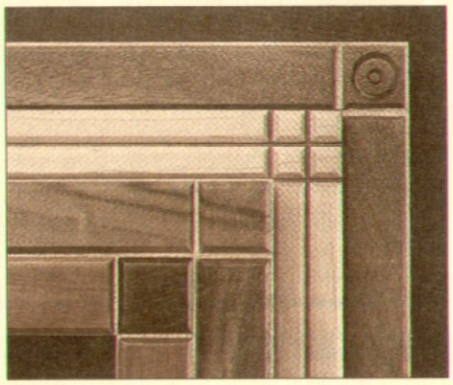

Desk Picture Frames *page 12*

Stool *page 18*

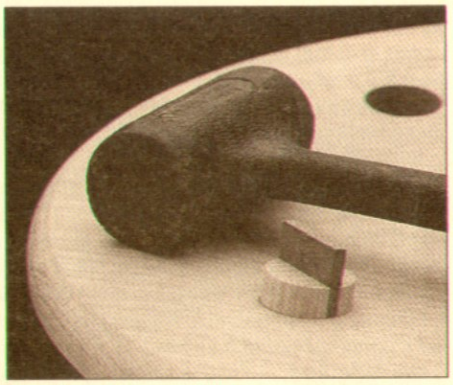

Wedged Round Tenons *page 24*

FROM FELLOW WOODWORKERS

Tips & Techniques

EASY VISE MOUNTING

■ Bench vises are heavy to lift and awkward to move around. So installing one can be a real chore. I used to disassemble the vise or else tip the bench on edge or upside down to do the job. But I found an easier way.

I use a piece of scrap 2x4 about 36" long, see Fig. 1. On the 2x4 mark the distance from the floor to the bottom of the benchtop (less about ⅛"). Then clamp the 2x4 in the vise with the vise mounting bracket lined up to this mark.

Now just lift the 2x4 up and balance the vise against the front edge of the bench, see Fig. 1. Then mark the position for the mounting screws on the bottom of the benchtop, see Fig. 1a. After drilling pilot holes, raise the 2x4 again to hold the vise as you drive in the screws.

If you use two 2x4 scraps clamped in the vise rather than one, the vise will almost stand up by itself.

Walt Ross
San Luis Obispo, California

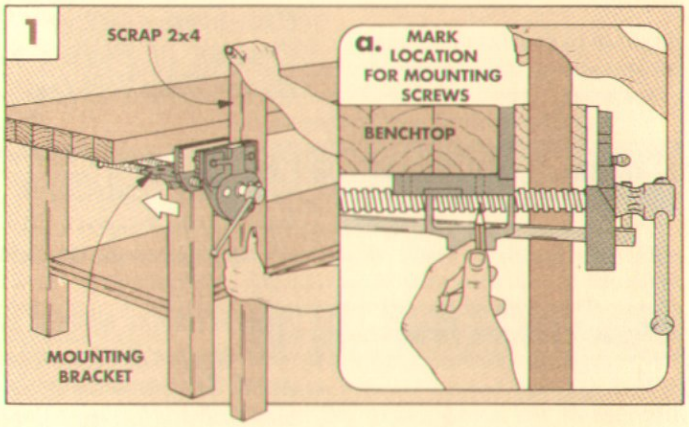

CHECKING A MITER GAUGE

■ Getting the miter gauge on my table saw adjusted so the saw cuts exactly 45° is tricky. But I've found an easy way to check it with a scrap piece of 2x4.

First, set the miter gauge to 45°. Now cut off one end of the 2x4 and discard that piece. Next, flip the 2x4 over and make a second cut, creating a triangular cut-off piece, see Fig. 1.

Then use this cut-off piece to see how accurately the miter gauge is set. But don't check the 45° corners. Instead, use a try square to see if the 90° corner is accurate, see Fig. 1a.

If the angle is exactly 90°, then you can be sure the miter gauge is set so the saw will cut a perfect 45° angle.

But if the angle is less than 90°, set your miter gauge to slightly *more* than 45° and make another test cut. If the angle is greater than 90°, set your miter gauge to slightly *less* than 45° and try again.

Doug Conway
Eminence, Missouri

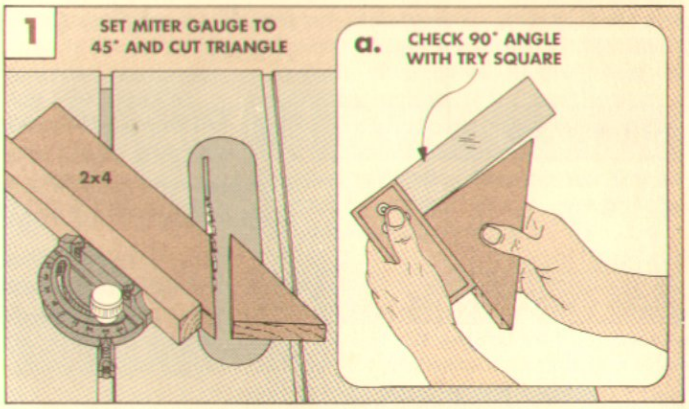

CLAMP CRADLES

■ It's hard to keep pipe clamps from rolling while adjusting stock for edge-gluing. To solve the problem, I made a set of rubber-lined cradles. They hold the clamps firmly in position.

The cradles have the added benefit of raising the clamps high enough that the handles clear the benchtop as they're turned to tighten the clamps.

To make a pair of cradles, start by ripping a piece of scrap 2x4 to 1½" wide and 3½" long. Now bore a hole centered in one side of the block. The hole should be the same diameter as the outside diameter of the pipe. Next, cut the block in half through the hole, making two cradles about 1¾" high, see Fig. 1.

Then, to keep the pipe from rolling in the cradle, glue a piece of rubber inner tube (or sandpaper) into the cradle. The pipe will rest on the top edges of the rubber liner, see Fig. 1a.

To keep the cradle from falling over, I glue it to a 3" square piece of ¼" plywood.

Fred H. Vanderhoof
Hamburg, New York

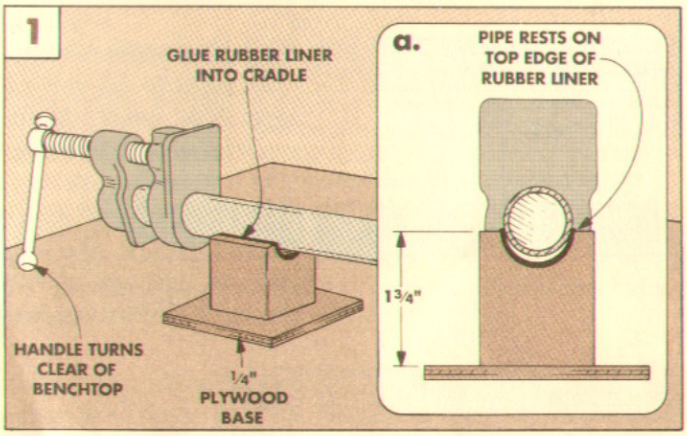

PICTURE FRAME SPLINES

■ I recently made a number of picture frames as gifts. But brads and other fasteners that hold the picture in the frame are hard to remove when you want to change the picture. So instead, I used splines set into grooves just behind the backing board in the frame, see Fig. 1a.

The splines are 1/8"-thick and 3/8"-wide. They fit snugly into grooves cut into all four frame pieces, see Fig. 1.

Just remember to cut the groove for the spline before cutting the rabbet in the back of the frame. (If you cut the rabbet first, you won't have a wide surface to ride on the saw table when you cut the groove.)

Once in the groove, the splines butt against each other, so there's no need for glue or brads. To change the picture, use a knife point to gently work the splines out of the grooves.

Bob Marlowe
Akron, Ohio

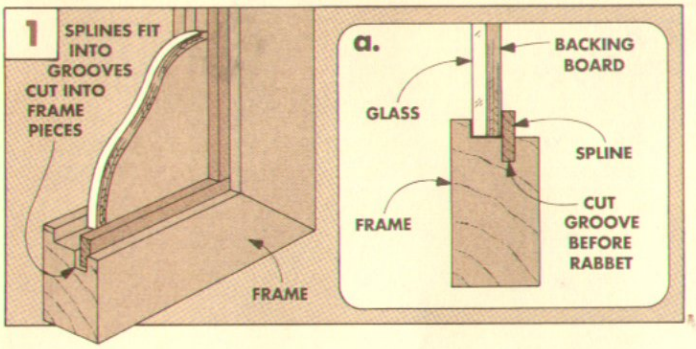

QUICK TIPS

RUNG GRIPPER

■ Sometimes I need a slip-free grip on a piece of round stock, like when I insert a round chair rung into a hole.

So I use one of those small sheets of rubber designed to help remove lids from jars. I got mine at a local hardware store.

They're inexpensive and really increase your grip.

M. P. Carroll
Sacramento, California

GLUE SPREADER

■ When doweling, it's often difficult to get just the right amount of glue into the dowel holes. To get around this problem, I use a double-headed (duplex) nail to apply glue in the holes.

When dipped in the glue, the double head retains just the right amount of glue between the two heads.

A 8d nail is perfect for 1/4" dowels. It's fast, easy, and it doesn't make a mess.

Don Thompson
Three Rivers, California

SAFER PENCIL HOLDER

■ When I'd lean over a project with my shop apron on, the pencil in the apron pocket would fall out or poke me in the neck.

To eliminate this, my wife removed the vertical pencil pocket on my apron. Then she sewed it back on at a less bothersome angle (about 45°).

Next, she divided the pocket in two lengthwise and shortened one side. Now I have a pocket for short pencils, too.

E. W. Maslak
Verona, Pennsylvania

SEND IN YOUR TIPS

If you would like to share a tip or idea, just send it to *Woodsmith*, Tips and Techniques, 2200 Grand Ave., Des Moines, Iowa 50312.

We will pay (upon publication) $15 to $100, depending on the published length of the tip. Please include an explanation and a photo or sketch (we'll draw a new one).

ROUTER TABLE HOLD-DOWN

■ I needed a way to keep a workpiece down tight against my router table. So I made a hold-down from a piece of scrap oak that works like the leaf spring on a car, see Fig. 1.

To make a hold-down like this, start with a piece of 3/4"-thick hardwood, about 3" wide and 12" long. Now rip a 1/16"-wide strip off one long edge. Next, cut wedge-shaped pieces off the corners of the other edge, see Step 1 in Fig. 2.

Now glue or screw the strip to the edges of the workpiece where the wedges were removed. To do this, first put a 1/2"-thick spacer between the workpiece and the strip, see Step 2.

Then to make the strip bow out in the middle, bend it over the spacer as you glue and clamp or screw it in place.

To use the hold-down, clamp it to the router table fence so that the workpiece is held firmly to the table, see Fig. 1. The workpiece should move freely as it's passed under the hold-down.

You can also use this hold-down on the table saw. To do this, clamp it to the rip fence of the saw.

Bruce Graham
Miltonvale, Kansas

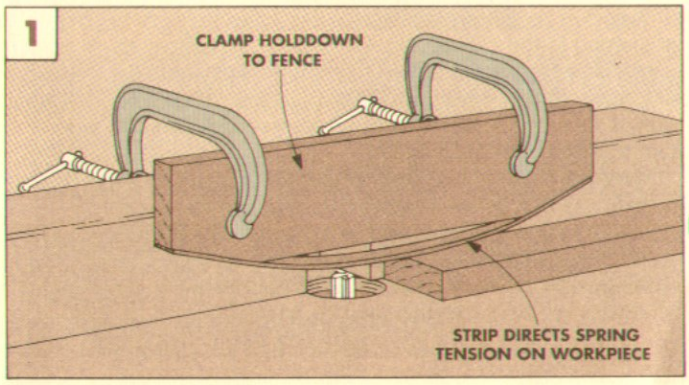

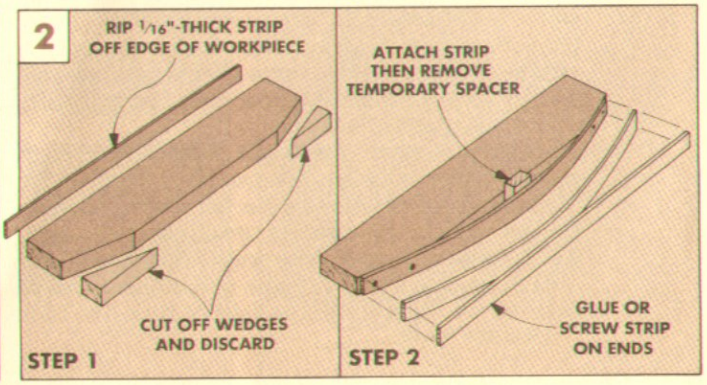

Cherry Night Stand

When you set out to build a classically styled cabinet, it seems only natural to use classic joinery . . . dovetailed drawers, frame and panel sides, and raised panel drawer fronts.

As I was working on this Night Stand and it was beginning to take shape, a few people wandered into the shop to check the progress. They all had the same initial comment, "It's so small."

But its scale in the shop can be deceiving. Put it alongside a bed or sofa chair, and it takes on all the proper proportions. And, its scale from a creative standpoint is no different than the challenges offered by a full-sized dresser. (Which means it's a great way to test your skills, without using a lot of lumber.)

COMPANION PIECE. This Night Stand is designed to complement two earlier *Woodsmith* projects — the Cherry Dresser (*Woodsmith* No. 58) and the Lingerie Dresser (No. 53). If you were to stretch some of its parts, you'd end up with one of those projects (almost).

BACK DESIGN. The only major design change we've made for the Night Stand is its finished back. The back is a frame-and-panel unit, not just a piece of plywood screwed to the back of the case.

JOINERY. Although most of the joinery of the cabinet is very traditional, we chose a slightly unusual approach for joining the drawer rails (that support and separate the drawers) to the sides of the cabinet. Typically, these rails are joined to the cabinet sides with mortise and tenon joints. However, we designed the rails so they could be mounted with a tongue and dado arrangement — the same joint used to attach the facing strips to the front of the rails (refer to Figs. 6 and 7).

MATERIALS. We chose black cherry for this project — including cherry plywood panels for the frame-and-panel sides. The drawer sides are made of poplar, which adds a nice contrast for the dovetails on the drawer fronts. The only significant hardware needed is three brass-and-porcelain drawer pulls (refer to Sources, page 31).

EXPLODED VIEW

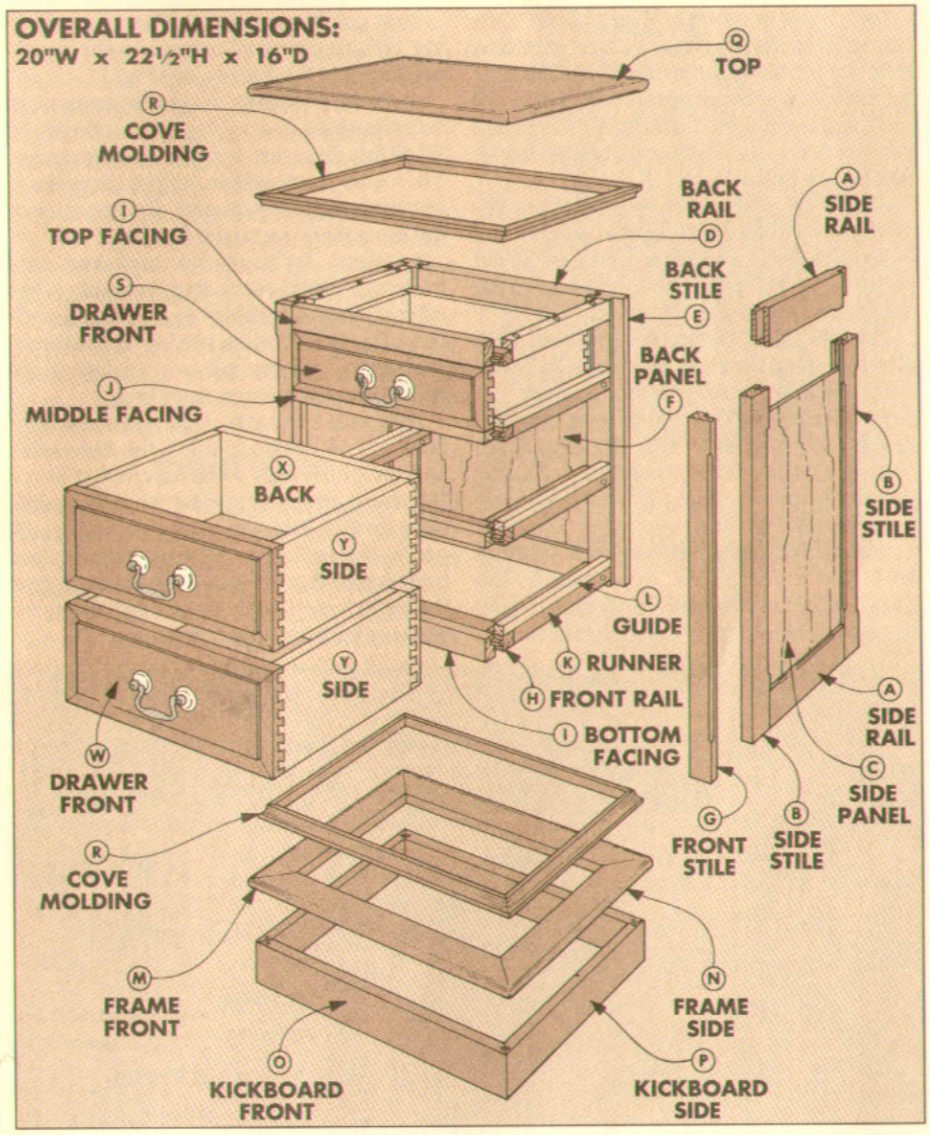

MATERIALS

SIDES	
A Rails (4)	¾ x 2 - 10¾
B Stiles (4)	¾ x 1½ - 18⅝
C Panels (2) – Ply	¼ x 10⅝ - 15½
BACK	
D Rails (2)	¾ x 2 - 14¾
E Stiles (2)	¾ x 2 - 18⅝
F Panel (1) – Ply	¼ x 14⅝ - 15½
FRONT	
G Front Stiles (2)	¾ x 1¼ - 18⅝
H Rails (4)	¾ x 1½ - 16¼
I Top/Bot. Facings (2)	¾ x 1⅜ - 15¼
J Middle Facings (2)	¾ x ¾ - 15¼
DRAWER GUIDES/RUNNERS	
K Runners (6)	¾ x 1½ - 9¾ (Rgh)
L Guides (6)	½ x ½ - 12¼ (Rgh)
BASE	
M Frame Fr./Back (2)	¾ x 1⅞ - 20
N Frame Sides (2)	¾ x 1⅞ - 16
O Kickboard Fr./Bk. (2)	¾ x 2⅜ - 19½
P Kickboard Sides (2)	¾ x 2⅜ - 15½
TOP & TRIM	
Q Top (1)	¾ x 16 - 20
R Cove Molding (8)	⅝ x ⅝ - 22 (Rgh)
TOP DRAWER	
S Front (1)	¾ x 3½ - 15¼
T Back (1)	½ x 3½ - 15¼
U Sides (2)	½ x 3½ - 12¼
V Bottom (1) – Ply	¼ x 12 5/16 - 14 7/16
BOTTOM/MIDDLE DRAWERS	
W Fronts (2)	¾ x 5¼ - 15¼
X Backs (2)	½ x 5¼ - 15¼
Y Sides (4)	½ x 5¼ - 12¼
Z Bottom (2) – Ply	¼ x 12 5/16 - 14 7/16

SUPPLIES

- Drawer Bail Pulls (3)
- Drawer Turnbuttons (3)
- Nylon Glide Strips (6)

CUTTING DIAGRAM

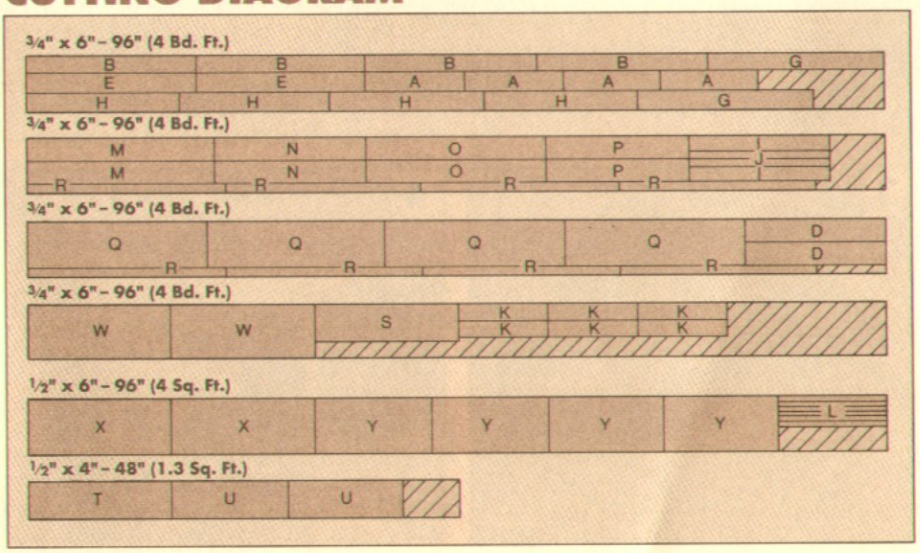

PLYWOOD

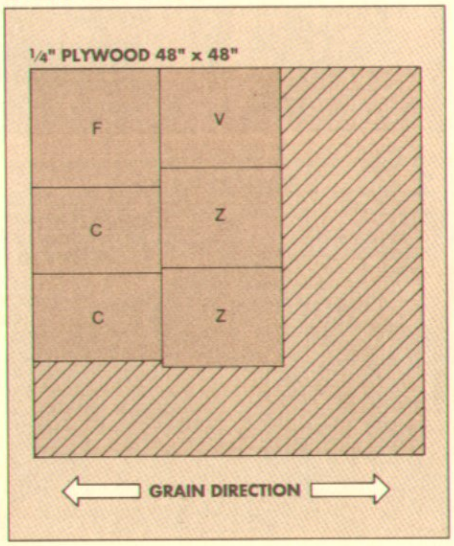

CASE

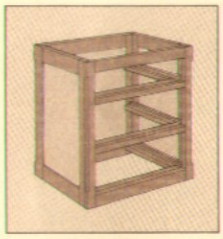

The night stand is a case made up of three frame-and-panel units: two side units joined to a back unit that, together, form a "U-shaped" assembly.

Across the front of the case are four rails with attached facing strips which define the openings for three drawers.

BACK & SIDE FRAMES

I began work on the cabinet by making the frame-and-panel units for the sides and back. Each unit consists of a top and bottom (horizontal) rail and two (vertical) stiles that surround a plywood panel.

RAILS & STILES. Start by ripping four **side rails (A)** and two **back rails (D)** to width and length from ¾"-thick stock, see Fig. 1. Next, rip four **side stiles (B)** and two **back stiles (E)** to finished width, see Fig. 1. Then cut all six stiles to the same length (18⅝").

GROOVE FOR PANELS. When all the rails and stiles for the case frames are cut to size, grooves are cut on the inside edges to accept the panels. Cut these grooves wide enough to accept the plywood panels, ½" deep, and centered on the thickness of the frame pieces, see Fig. 1.

Shop Note: The panels are made from ¼"-thick plywood. But most hardwood plywood actually measures *less* than ¼" thick. So cut the grooves just wide enough to accept the *actual* thickness of the plywood.

TENONS. After cutting the grooves, I cut stub tenons on the ends of all six rails. These tenons fit into the grooves in the stiles.

The length of the tenons matches the depth of the grooves (½"). The tenons are centered on the thickness of the rails, and the thickness matches the width of the grooves, see Fig. 2.

PANELS. With grooves and tenons cut on all of the frame pieces, dry-assemble the back frame, and also one side frame, to take measurements for the plywood panels.

Now cut the **panels (C, F)** to size, allowing 1/16" clearance all around so the panels will fit inside the frames, see Fig. 1.

ASSEMBLE FRAMES. Next, the frames can be assembled around the plywood panels. To do this, first glue the rails onto the panels. Then glue on the stiles. As you clamp each assembly together (across the joints) keep the assembly square and flat.

RABBETS. To keep the back and side frames in alignment during assembly of the cabinet, a shallow rabbet is cut on the inside face of both back stiles, see Fig. 2. I cut these rabbets on the table saw using a dado blade with an auxiliary fence, see Fig. 3.

JOIN SIDES & BACK. When rabbets have been cut on the back stiles, the case sides and back are ready to be assembled into a "U" shape, refer to Fig. 5 on the facing page.

To do this, first spread glue along the rabbets in the back stiles. Now position the side frames into the rabbets, then clamp across the back. Note: Check the inside corners for square after attaching the clamps.

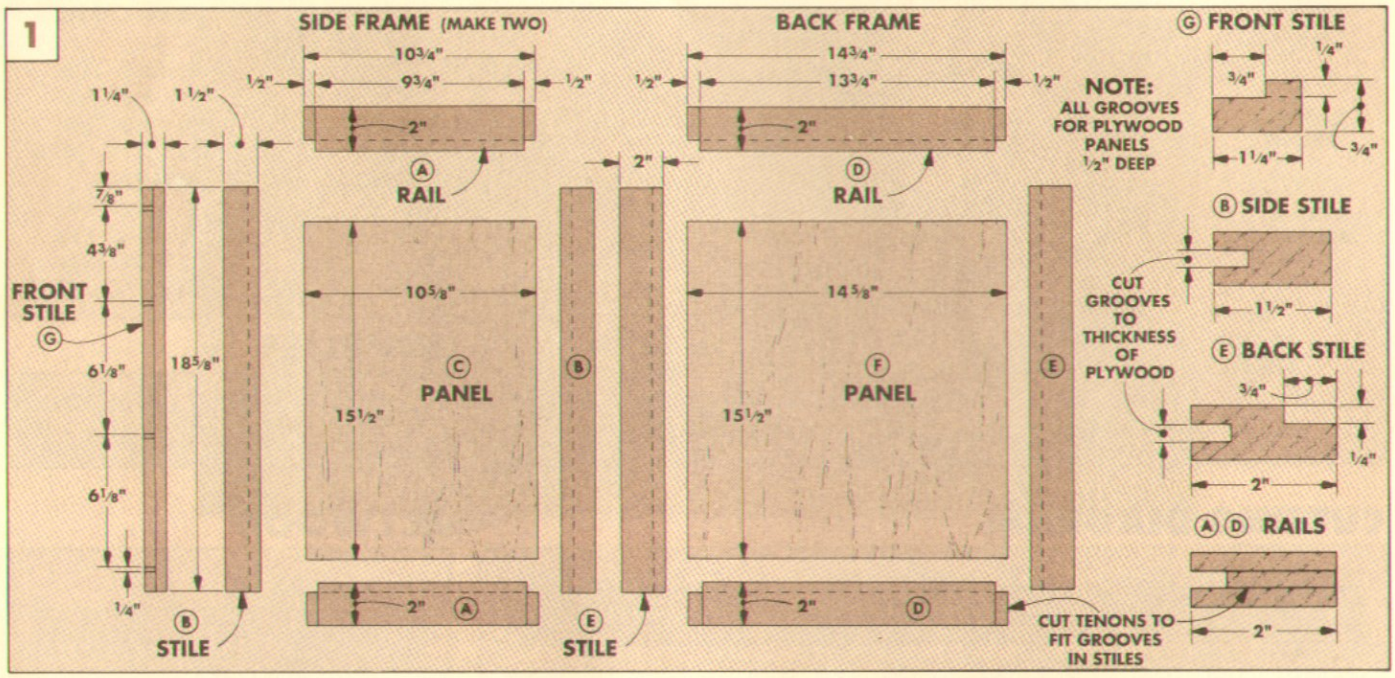

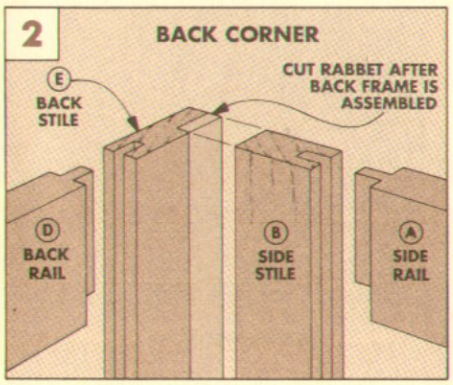

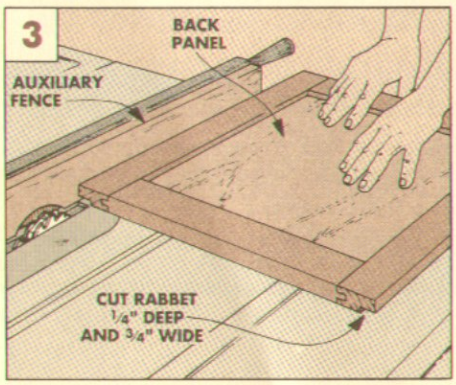

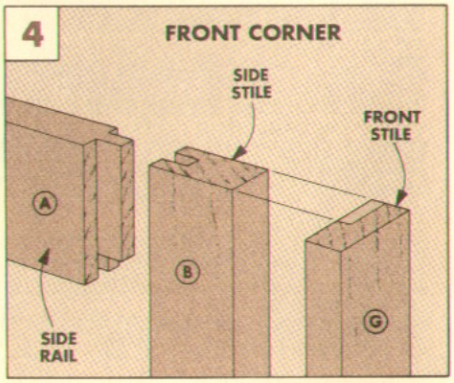

FRONT STILES

The front of the case is made up of a pair of vertical stiles glued to the front of the side frames, see Fig. 5. Then, rails and facing strips are added, refer to Fig. 7.

Start by ripping the **front stiles (G)** to width, then cutting them to the same length as the side frame, refer to Fig. 1.

DADOES. Next, to accept the front rails, cut ¼" x ¼" dadoes across the back of each stile. (Measure the location of the dadoes from the top end of each stile, see Fig. 1.)

ATTACH STILES. To mount the front stiles to the side frame, first cut a rabbet along the back (dadoed) face of each front stile, see Figs. 1 and 4. Then glue the front stiles into place, see Figs. 5 and 5b.

FRONT RAILS

Measure across the inside of the case at the back to determine the length of the four **front rails (H)**. Then cross-cut them to this length, and rip them to finished width.

TONGUES. To form tongues on the front of the rails (to fit the dadoes in the stiles), cut two rabbets on the front edge of each rail, see Fig. 6. These tongues also will hold the facing strips, refer to Fig. 7a.

FACING STRIPS. After the rails are glued in place, the **facing strips (I and J)** can be ripped to width. Note: There are two different sizes of facing strips, see Fig. 7a.

CUT GROOVES. Next, cut a groove on the back face of each strip to fit onto the tongue on the front rails. Note: The groove on the top and bottom strips (I) is *offset* on the width, see Fig. 7a.

CUT TO LENGTH. Now cut the strips to length to fit between the front stiles, and glue them in place, see Fig. 7.

DRAWER RUNNERS & GUIDES

Once the main case is complete, begin work on the drawer supports. Each support consists of a runner and guide, see Fig. 8.

RUNNERS. To make the **runners (K)**, rip six pieces of ¾" stock to width, see Fig. 8. Then cut these to length to fit between the back of the case and the back edge of the front rails (H), see Fig. 8a.

GUIDES. Next, cut six ½"-wide **guides (L)** to length so they fit between the back of the case and the back of the front stiles (G), see Fig. 8a. Now screw a guide to the top of a runner to make a drawer support, see Fig. 8.

Glue and screw the completed supports to the inside of the case, with the front ends of the drawer guides (L) glued to the top of the front rails, see Fig. 8a.

CHAMFERS

To give the case a finished look, stopped chamfers are routed on the outside edges of all the stiles, and also around the inside edges of the side frames, see Fig. 7. (For routing the inside chamfers, refer to page 17.)

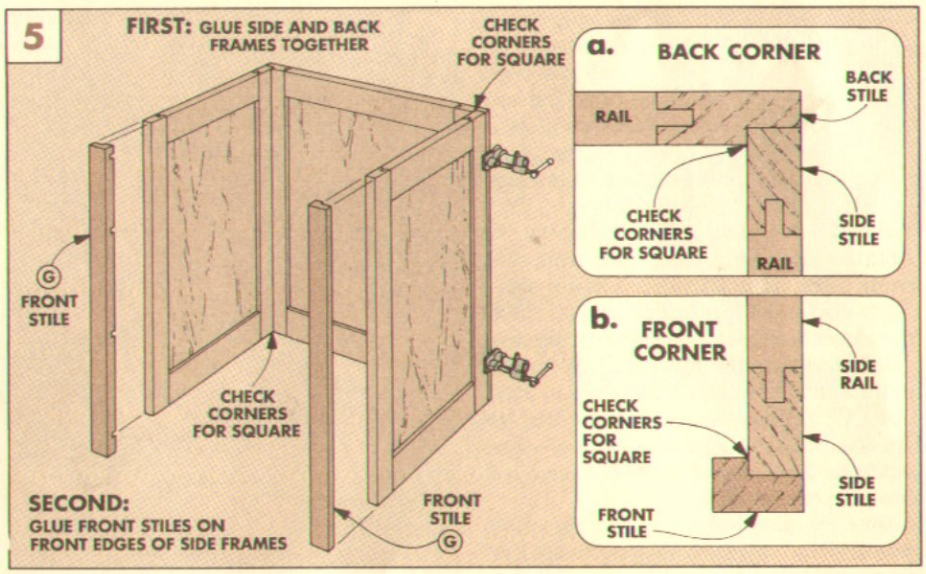

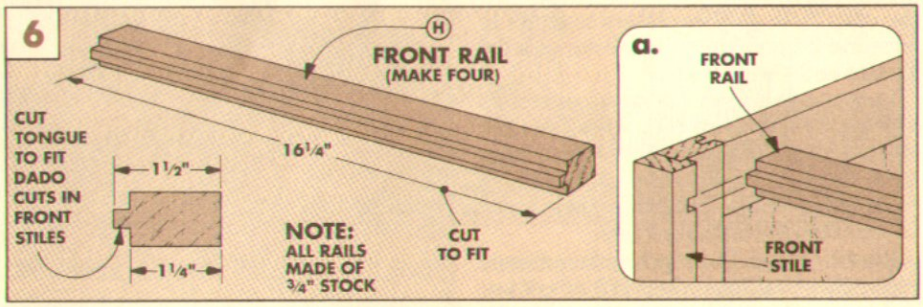

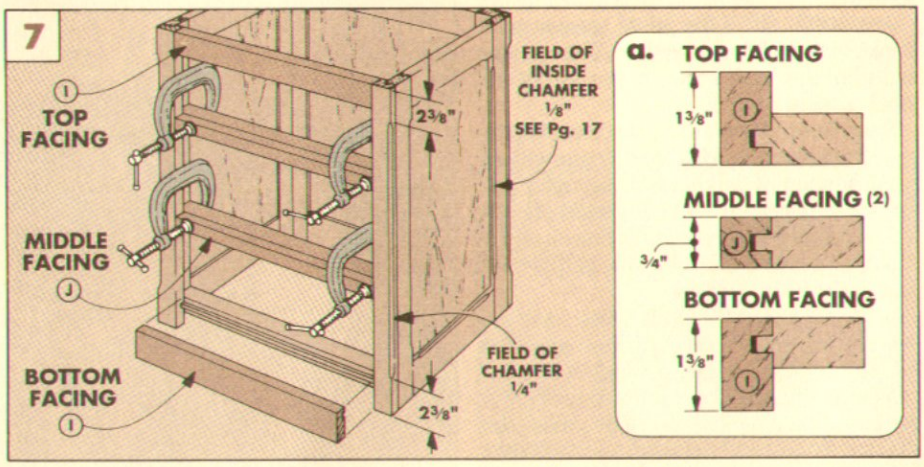

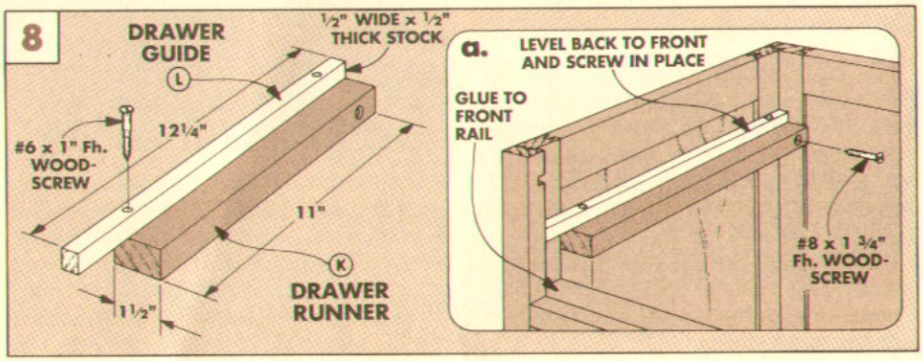

BASE & TOP

With the basic case of the night stand complete, work can begin on the base. The base assembly consists of a base frame that's glued on top of a kickboard frame.

BASE FRAME. To make the base frame, cut a **frame front (M)**, **frame back** (also **M**) and two **frame sides (N)** to width, see Fig. 9. Then rough cut all four pieces to length, 4" larger than the case.

Before cutting the pieces to final length, rout a bullnose edge on each piece. First, rout a ½" round-over on the top edge, see Fig. 9b. Then, to rout the bottom edge, switch to a ¼" round-over bit raised 3/16" above the router table.

After the pieces are routed, miter both ends of all the pieces so the lengths are 2¼" longer (from long-point to long-point) than the case. Now glue the miters together to form the frame. (Hold the pieces on a flat surface until the glue sets.)

KICKBOARD. The rest of the base consists of a **kickboard front (O)**, **back** (also **O**), and two **sides (P)**, see Fig. 9. After cutting these pieces to width, miter both ends of each piece so the length of each is ½" *shorter* than the bullnose frame.

KERF & SPLINE. To keep the miters aligned while clamping, cut a kerf in each miter, and cut a spline to fit each kerf, see Fig. 9c.

ASSEMBLY. After the joints are cut, glue the kickboard frame together. Then center and glue the base frame to the top of the kickboard, see Fig. 9.

Shop Note: There's a trick to centering the base frame over the kickboard frame with an equal amount of overhang all around. First, draw a centerline on all four pieces of each frame, see Fig. 9. Then simply line up all the marks and clamp the assembly in this position while the glue dries.

BASE TO CASE. To attach the base assembly to the cabinet case, drill shank holes through the base frame, see Fig. 9a.

Now turn the case upside down and center the base frame on the case. Then mark the location of the pilot holes through the shank holes. Finally, drill the pilot holes and screw the base to the cabinet.

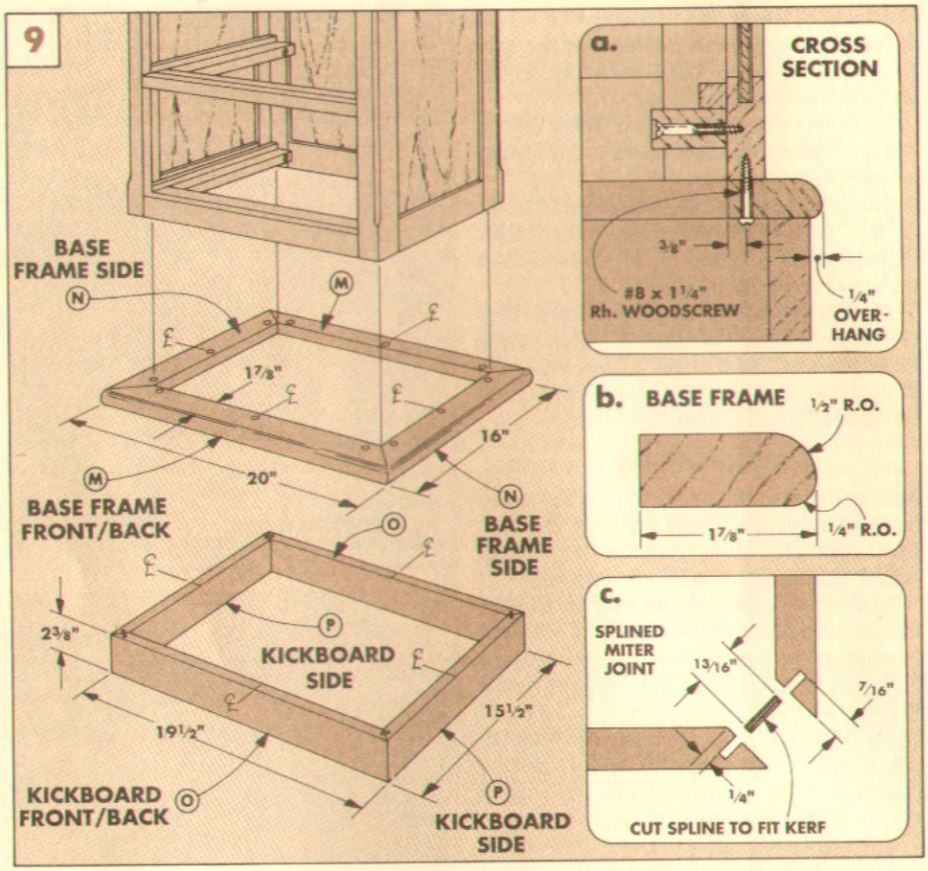

CABINET TOP

To complete the cabinet, I started work on the solid-wood **top (Q)**. Begin by edge-gluing enough ¾" stock to make a blank 18" wide and 22" long. After the glue dries, plane the blank flat and trim it 2¼" larger than the top of the case, see Fig. 10.

ROUT EDGES. Next, rout the same bullnose profile on all four edges as on the base frame — but for the top, the ¼" round-over is on the *upper* edge.

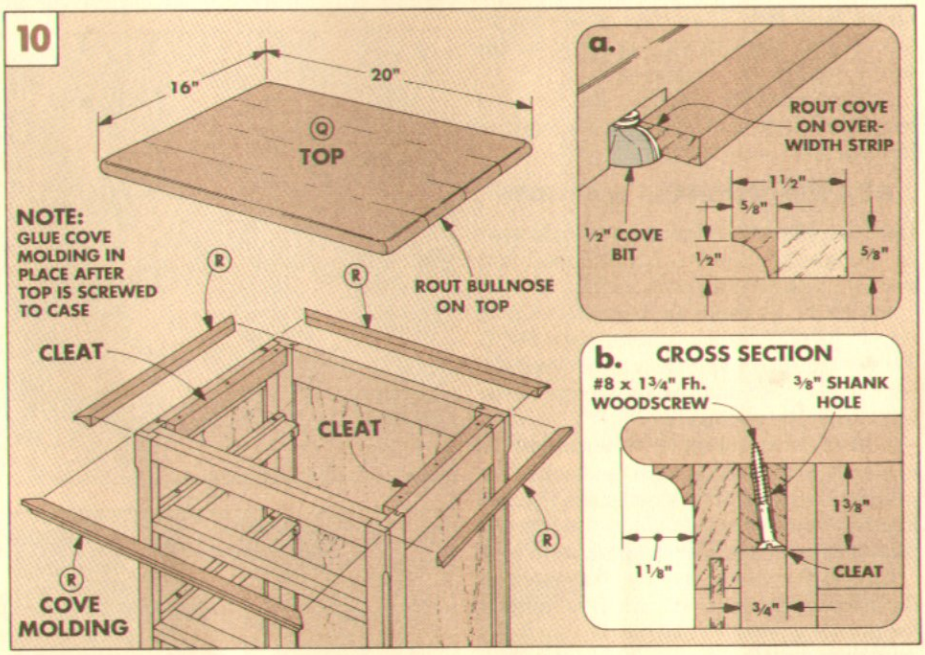

ATTACH TOP. To fasten the top to the cabinet, I first glued a pair of cleats inside the case, see Figs. 10 and 10b. Next, with the top lying on the bench and the case positioned on it upside down, center the top on the case.

Then drill screw holes through the cleats into the underside of the top, see Fig. 10b. Now enlarge the shank holes in the cleats to let the top move with changes in humidity. Then screw (don't glue) the top in place.

MOLDING. To dress up the cabinet, I glued **cove molding strips (R)** around the case where it's joined to the base and the top, see Figs. 10 and 10a.

DRAWERS

When the molding strips are in place, the last thing before the cabinet is complete is to make the drawers.

DRAWER PARTS. Begin by cutting the **drawer fronts (S, W)** from ¾" stock so they're ⅛" smaller in both dimensions than the drawer openings, see Fig. 11.

Next, cut the **drawer backs (T, X)** to the same dimensions as the fronts, but from ½"-thick stock. (I used poplar for the drawer sides and backs.) Then cut the **drawer sides (U, Y)** from the same ½" stock. Cut the drawer sides to the same width as the fronts, and to a uniform length of 12¼".

JOINERY. Once all the drawer pieces are cut to size, rout half-blind dovetail joints on each corner, see Fig. 11a. (For more information on routing half-blind dovetails, see *Woodsmith* No. 58).

Next, cut grooves along the lower inside edge of each drawer piece as a channel to hold the drawer bottoms, see Fig. 11a.

DRAWER BOTTOMS. Now cut the plywood **drawer bottoms (V, Z)** to fit in the grooves in the bottom of the drawers.

Shop Note: Before assembling the drawers, cut a notch centered on the bottom edge of each drawer back, see Fig. 11. This notch lets the drawer slide over a drawer stop that's added later, see Fig. 12.

RAISE THE PANELS. To complete the drawer fronts, I made chamfer cuts around the edges to create the effect of a raised panel, see Fig. 11b. (See *Woodsmith* No. 53 for information on making raised panel drawer fronts.)

When the drawer fronts have been chamfered, drill holes for the drawer pulls, see Fig. 13. The drawer pulls are centered on the drawer fronts.

ASSEMBLY. Now glue the drawers up square with the plywood bottoms in place.

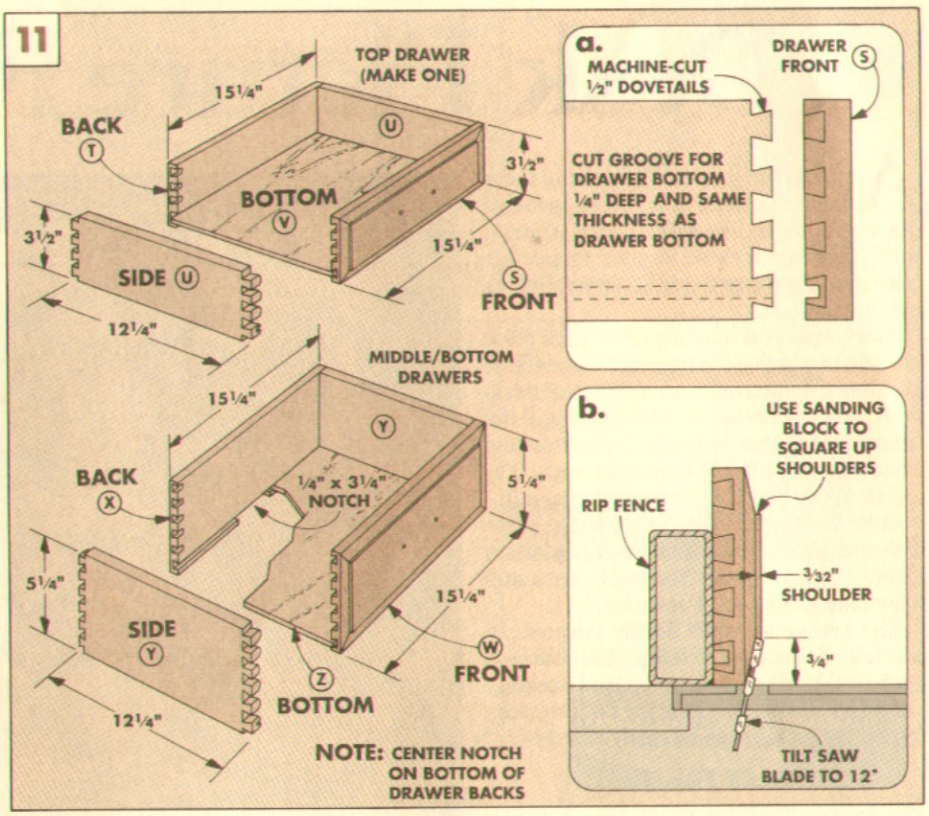

DRAWER STOPS AND HARDWARE

After the drawers have been assembled, there are a few details that remain before the night stand is complete.

GLIDE STRIPS. To help the drawers slide more smoothly, I added nylon glide strips to the drawer runners, see Figs. 12 and 13. These strips raise the drawers off the facing strips and create a continuous, evenly-spaced gap around the drawer front.

DRAWER STOPS. Then, to keep the fronts of the closed drawers flush with the cabinet facing strips, I glued a drawer stop pad to each front rail, see Fig. 12.

Note: Size these pads smaller than the notch on the bottom of the drawer back so the drawers can be slid into their openings.

TURNBUTTONS. Then, to prevent the drawers from being pulled all the way out, I screwed turnbuttons to the inside of the front rails, see Fig. 14.

FINISH. To complete the project, I finished the entire night stand with General Finishes' Two-Step Sealacell and Royal Finish.

Finally, after the finish dries, mount the drawer pulls onto the drawer fronts.

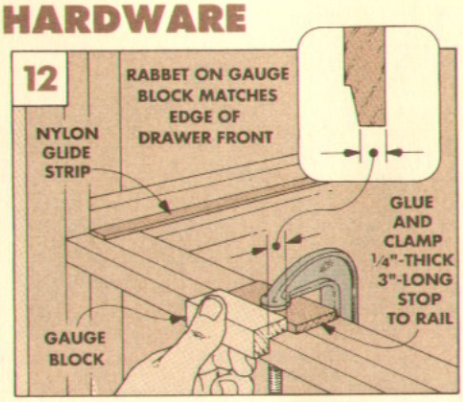

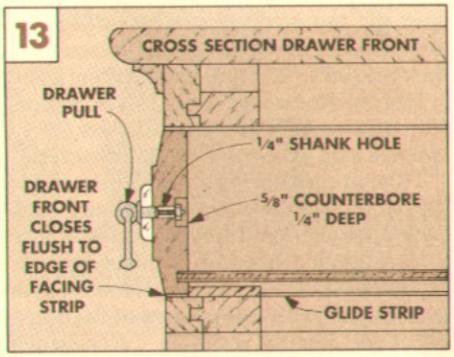

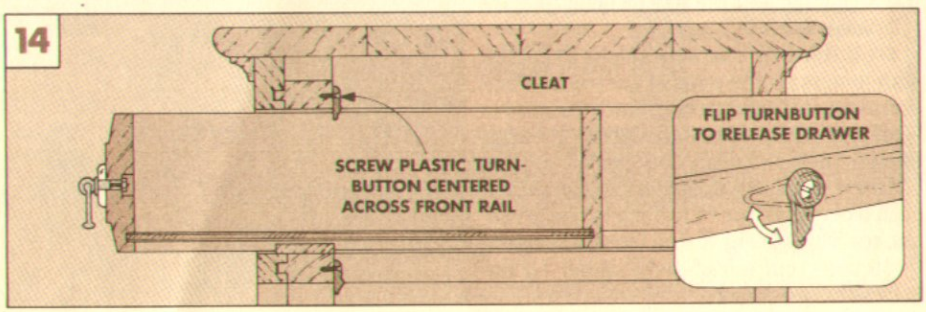

Desk Picture Frames

At first, it may seem like making these picture frames is a rather involved process. It looks like there's a lot of fitting thin little squares of veneer in perfect position on the front of the frames. But it's not that difficult.

The "veneer" is actually a 3/4"-thick piece of wood that's glued to the front of the frame and then trimmed off to leave only 3/32" thickness. And the design is routed through the veneer just deep enough so the contrasting wood (the frame itself) shows through. (For variations on the basic design, see page 15.)

CORNER JOINTS. There's something else different about these frames — they're not joined with miter joints. Instead I used a stub tenon and groove joint, see Fig. 1.

The groove serves a double purpose. In addition to holding the tenon at the corners it also holds the picture, glass, and backing.

And by leaving access at the bottom of the frame, the picture can be easily changed.

BASE FRAME

The first thing to decide is the size photo you want to frame. All the measurements shown here are for a 5" x 7" photo, see Fig. 1.

Begin work on the base frame by resawing a 32"-long piece of stock to 5/8" thick. Then rip it 1" wide.

GROOVE. Once the workpiece is cut to size, the next step is to cut the groove for the stub tenon and groove joint. To allow for the correct setback on the front of the frame after the top layer of wood is added, the groove is cut off-center on the thickness of the workpiece (1/8" back from the front face).

I cut the groove 5/16" wide. This accommodates the average thickness of glass (3/32"), optional mat, photo, and 1/8"-thick backing.

To cut the groove on the table saw, adjust the dado blade to cut 1/4"-deep, see Fig. 2. Now place the *front* face of the workpiece against the rip fence and cut the groove.

FRAME PIECES. Once the groove is cut in the workpiece, the four pieces of the frame can be cut to length, see Fig. 1. Cut two **sides (A)** 8 1/2" long, and the **top (B)** and **bottom (C)** pieces each 5" long.

STUB TENONS. The next step is to cut the stub tenons on the ends of the top and bottom pieces to fit the groove. Since the groove is off-center, the tenons are cut off-center on the thickness to match, see Fig. 3.

To cut the tenon shoulders on the *face* of each piece, you'll need to cut a 1/8"-deep rabbet, see Step 1 in Fig. 3. And then to complete the tenons, cut a 3/16"-deep rabbet on the back side, see Step 2.

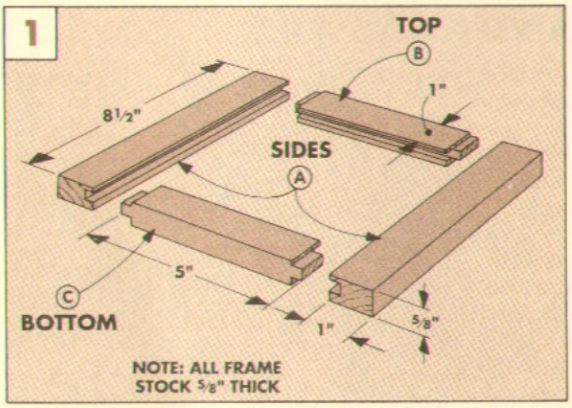

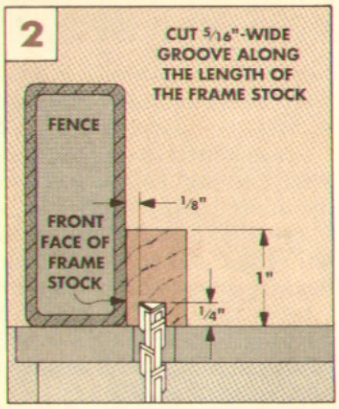

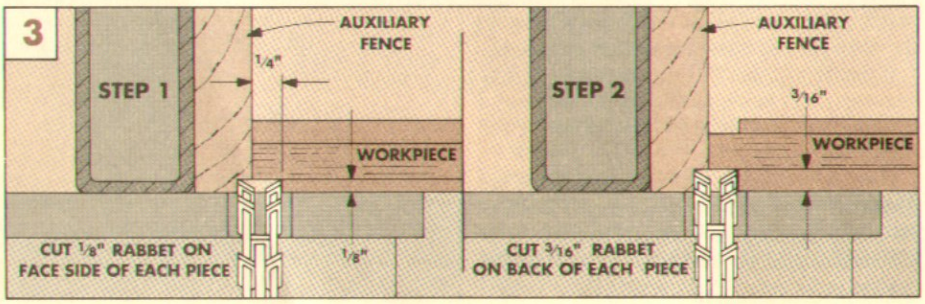

RESAW BOTTOM PIECE. The glass, picture, and backing slide out through the bottom of the frame. To create the opening, the frame bottom piece has to be resawn in two.

To do this, set the rip fence 5/16" from the blade, see Fig. 4. Next, place the *front* face of the piece against the fence and resaw the piece in two. The 5/16"-thick piece is the finished frame bottom (C). But save the waste piece, see Fig. 4a. (Resaw it, if necessary, to 3/16" thick. It will be glued to the backing board as a backing strip later.)

FRAME ASSEMBLY. Once all the pieces are cut, glue and clamp the frame together, see Fig. 5. To hold the bottom piece flush with the frame face until the glue dries, I cut temporary spacers and slipped them into the grooves with the tenons, see Fig. 5a.

TOP LAYER

After the base frame is assembled, you can glue on the top layer of contrasting wood. You could glue on a 3/32"-thick layer, but there's an easier way. I glued on a thicker layer (3/4") and then resawed most of it leaving a 3/32"-thick layer.

Start by gluing on the top layer in four pieces: the two **sides (E)** are each 8½" long. And the **top** and **bottom pieces (F)** are each 4½" long, see Fig. 6. (There's a variation of this that has a different wood glued to the corners, refer to Design #3 on page 15.)

FINAL THICKNESS. When the glue is dry, trim the extra thickness off the top layer in two passes. First, set the rip fence 3/4" from the blade, and hold the *back* of the frame against the fence to make a pass on all four frame pieces, see Fig. 7. Next, move the fence slightly to leave the top layer 3/32" thick and skim the remaining stock off all pieces.

ROUTING THE PATTERN. Next, rout the pattern into the frame face, see Fig. 8. I used a V-groove bit mounted in the router table.

Begin by routing the outside edge of the frame. To do this, set the fence so the point of the bit is aligned flush with the face of the fence, see Step 1 in Fig. 8a.

Next, reposition the fence so the point of the bit aligns with the *inside* edge of the frame, see Step 2. Now rout these grooves so they intersect at the inside corners of the frame opening, see photo below.

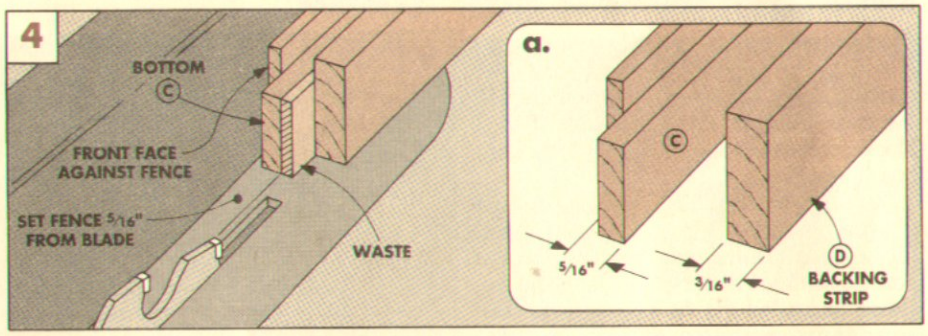

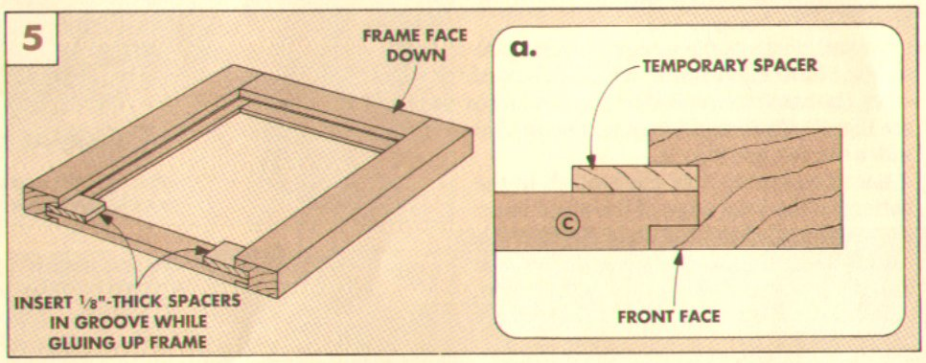

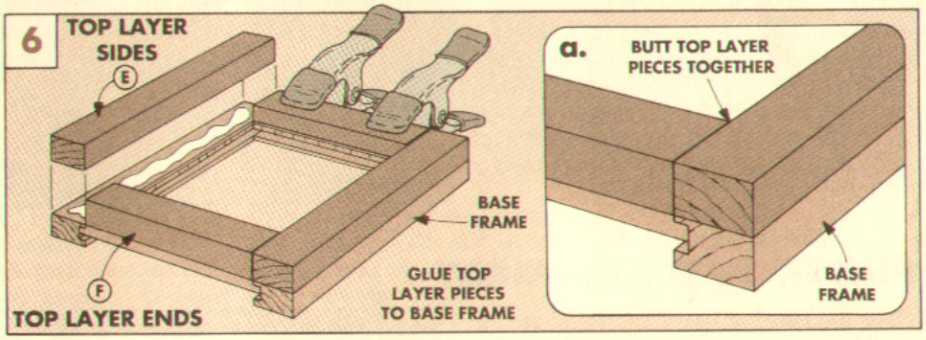

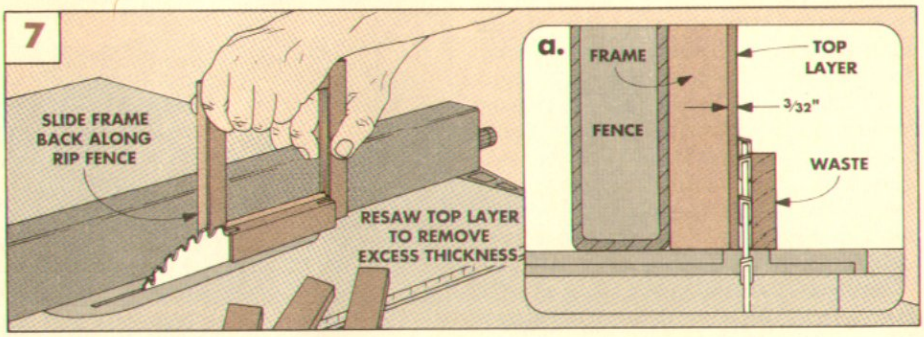

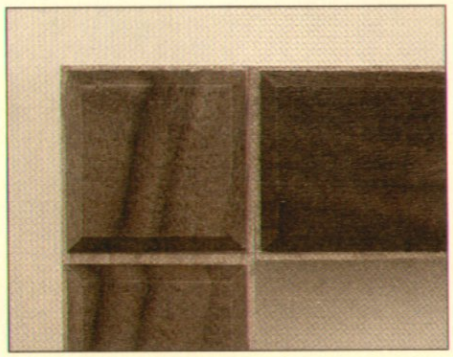

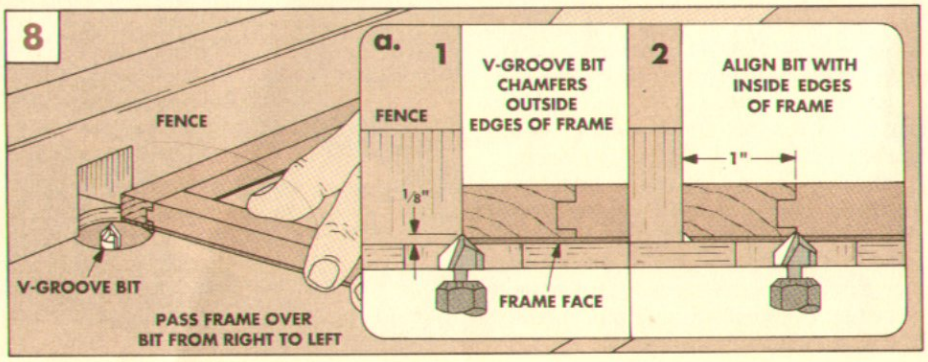

BACKING BOARD AND STAND

The last step in constructing a picture frame is to make the backing board and stand. The backing board holds the photo and glass in the frame. And the stand is a wedge-shaped block screwed to the back of the backing board, see Fig. 9.

BACKING BOARD. The **backing board (G)** can be made of any stiff 1/8"-thick material, such as Masonite or plywood. Cut the board to width to fit the groove in the frame. (Mine measured 5".) As for length, cut the board to fit from the top of the groove to the bottom of the frame (7 3/4").

STAND. Next, cut the wedge-shaped block for the **stand (H)** from a 5/8"-thick piece of stock (to match the frame) on the band saw, see Fig. 10. Then slightly round the top end with a sander, see Fig. 9a.

BACKING STRIP. Now cut a notch in the bottom of the long edge of the stand to accommodate the **backing strip (D)** that was cut off the bottom frame piece earlier, see Fig. 9. Use one end of the strip as a template to indicate the stock to be removed for the notch, see Fig. 11.

The next step is to glue the backing strip onto the backing board, see Fig. 9. It fills in the area between the two sides of the frame.

Finally, screw the stand to the backing board, see Fig. 9. Note: I didn't *glue* the stand to the backing board. This way, if I ever want to hang the frame on the wall, it's simply a matter of unscrewing the stand.

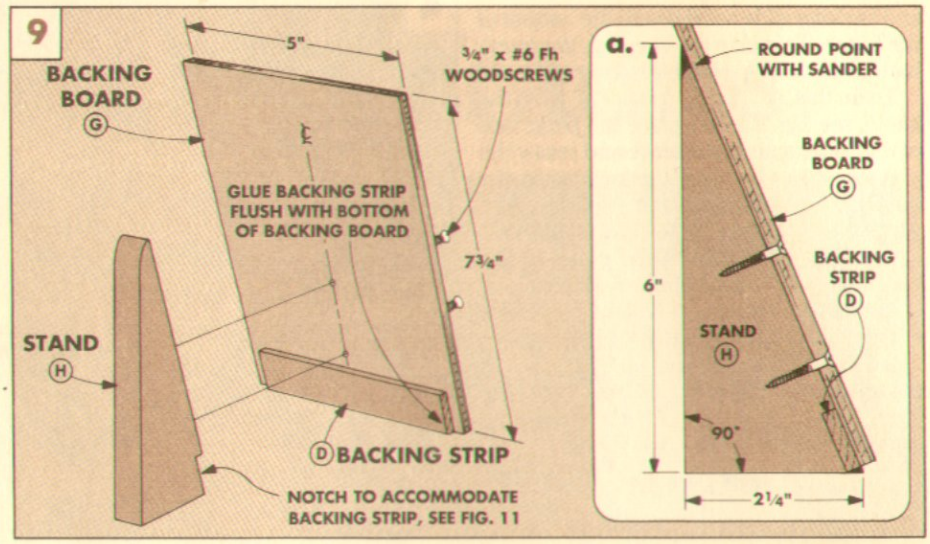

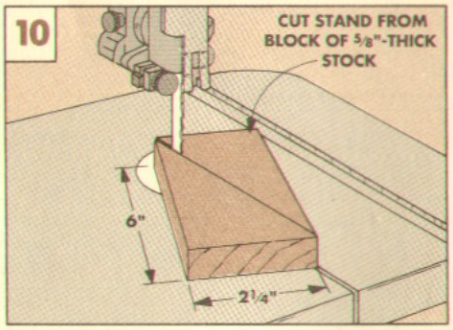

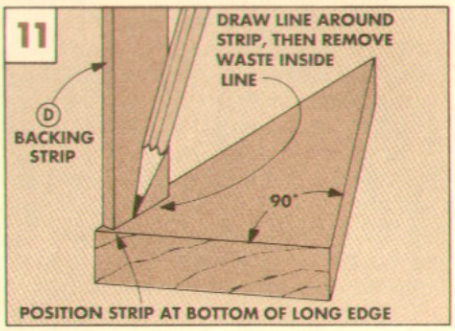

FINISH AND ASSEMBLY

Once the backing board and stand are assembled, you can apply a finish to all the frame parts. I sprayed on two coats of clear satin polyurethane. Once the finish is dry, the contents can be inserted in the frame.

GLASS. Several things go in the frame along with the photo. The first is the glass. I used a standard thickness (3/32") piece of glass that measured 5" x 7". But you could use a piece of 1/8" Plexiglas. Slide the glass through the bottom of the frame so it drops into place behind the frame face, see Fig. 12.

MAT AND PHOTO. If you're using a mat, it goes into the frame next. Pre-cut mats are often available at frame shops and art supply stores in a variety of colors. With the mat in place over the glass, slide the photo into the frame, face down on the mat, see Fig. 12.

BACKING BOARD. Finally, slide the backing board (G) into the grooves in the side pieces, see Fig. 13. Push it all the way in.

FILLERS. Depending on the thickness of the glass and the mat you use, the contents of the frame might be too loose. If this is the case, remove the backing board and insert one or more pieces of cardboard or heavy paper as filler on top of the photo. Then slide the backing board back in place.

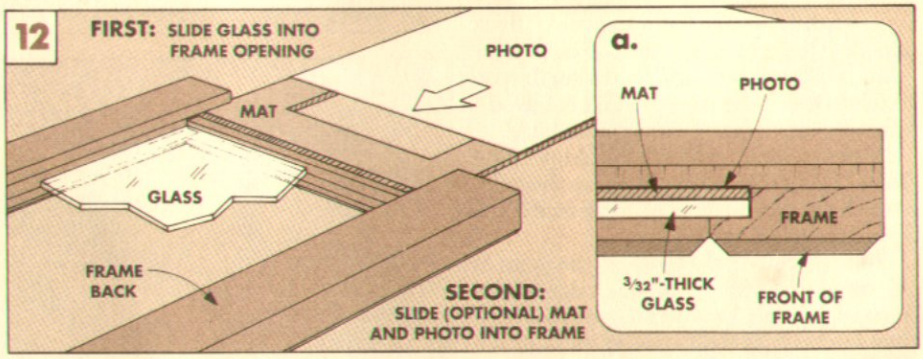

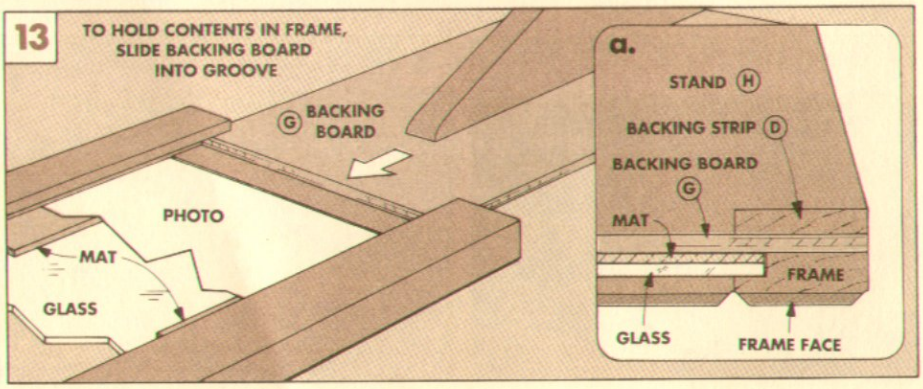

DESIGN #2

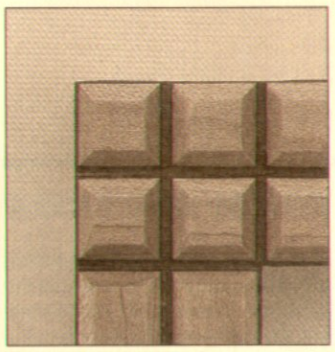

This simple variation of the basic frame design is made by routing an additional groove centered on each frame piece.

■ This frame is a slight variation of the basic design shown on the bottom of page 13. The difference is that an additional groove is routed in each face of the frame to create four small squares at each corner.

To make this design, first complete the frame as shown on page 13. Then re-position the V-groove bit so the point is centered on the frame side.

CENTER THE BIT. The most important thing about this design is to get the bit exactly centered on the width of the frame, see Fig. 1a. To do this, start with a very shallow cut, and then check the position of the bit to be sure it's centered. Now, re-adjust the height of the bit to cut a 1/8"-deep groove (to match the other grooves in the frame).

Finally, rout the center groove across all four frame faces.

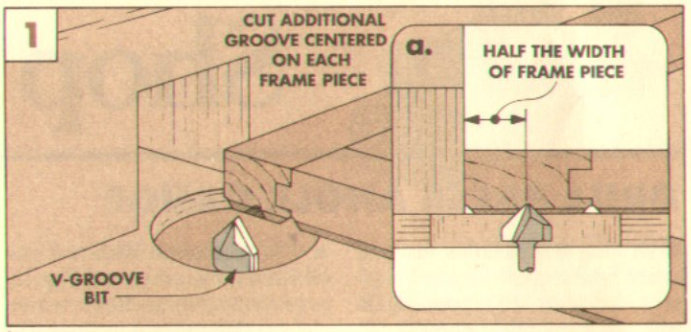

DESIGN #3

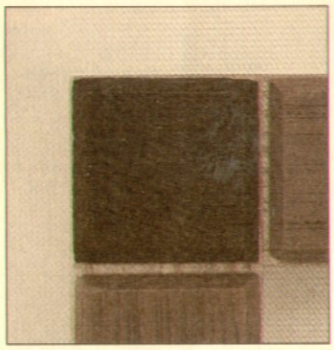

To add an extra accent to your frame, glue 1"-square blocks of a second contrasting wood onto the corners of the base frame.

■ In this variation, two contrasting woods are glued to the base frame, rather than one. The routed design, however, is the same as that shown on page 13.

To make this design, first cut four 1"-square pieces of contrasting wood for the corners of the top layer. Then cut the other pieces of the top layer from a different wood. For the basic frame that holds a 5" x 7" photo, make the top and the bottom pieces 4½" long and the side pieces 6½" long.

GLUE SQUARES IN CORNERS. Now glue the pieces to the base frame with the square pieces in the corners. All the pieces should butt up against each other, see Fig. 2.

Once the glue is dry, resaw the frame to thickness. Then rout the same pattern shown on page 13 on the router table.

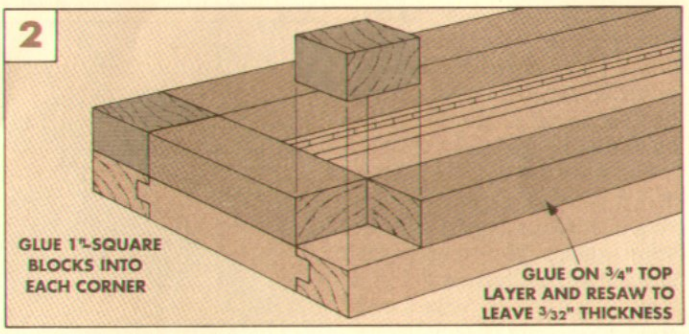

DESIGN #4

■ To make the circles in the corner squares, I used a plug cutter and a countersink. The countersink is one made by W. L. Fuller (No. C8 countersink). It's the type that fits around a drill bit. (For sources, see page 31.)

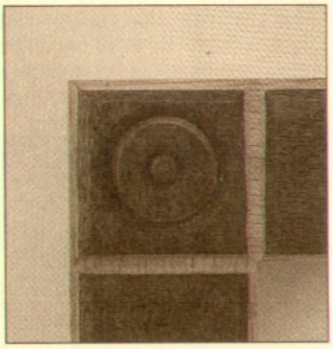

The circles in this corner square are made with two bits you might not expect — a plug cutter and a countersink.

Start with the completed frame shown on page 13. To get the circles centered in the corner squares, I used a fence and stop block on the drill press to align the frame, see Fig. 3.

To do this, mount a 1/16" drill bit in the chuck and align the point of the bit with the center of one of the squares. Next, move the fence and stop block against the frame and clamp them to the drill press table, see Fig. 3.

PLUG CUTTER. Now, to make the large circle, plunge a ½" plug cutter into the veneer just deep enough for the base frame to show through, see Fig. 4.

COUNTERSINK. Next, replace the plug cutter with the countersink, see Fig. 5. Retract the drill bit into the countersink so the bit will not enter the wood. Now make a cut the same depth as the plug cutter circle.

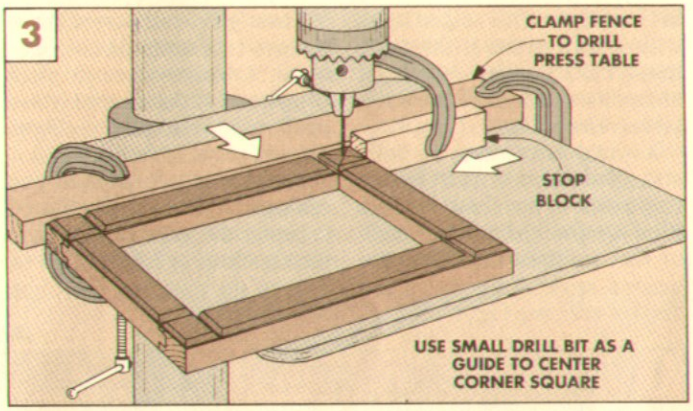

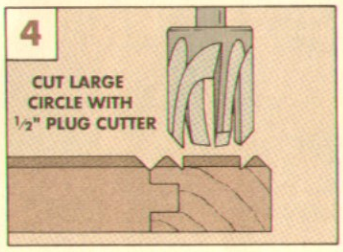

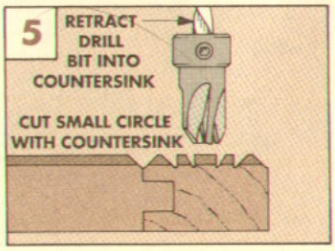

Shop Notes

DRILL PRESS ANGLE GAUGE

■ Drilling angled holes on a drill press is a straightforward matter — if your drill press table tilts. (If your table doesn't tilt, see the Shop Note below.) But even if the table *can* be tilted, you may have a problem setting the table at just the right angle.

When we were building the Shop Stool for this issue (see page 18), we needed to drill holes at an exact angle. Otherwise all the drilled parts wouldn't line up for assembly. But I've never been comfortable relying on the angle indicator that's built-in to the drill press table.

So, to set the drill press table at just the right angle, I made a simple gauge using my table saw miter gauge. (I'm more comfortable with its accuracy.)

MAKE GAUGE. To make a drill press angle gauge, set the miter gauge on your table saw to the desired drilling angle. Then, cut a 4"-long angled block off one end of a scrap piece, see Fig. 1.

CENTER TABLE. Before you can use this gauge, you'll need to line up the drill press table with the centerpoint of the chuck. If these aren't in alignment to begin with, you'll end up drilling the holes at a compound angle.

To align the table to the chuck, first insert a long drill bit or a straight rod into the chuck, see Fig. 2. Next, loosen the clamp that holds the table to the drill press column. Now, position the table so the bit is centered over the center hole in the table and re-tighten the column clamp.

TILT TABLE. To use the gauge, set it on the table with the angled side against the bit. Then loosen the bolt (or clamp) that allows the table to be tilted, and tilt the table so the edge of your angle gauge butts up against the side of the bit, see Fig. 2. Now lock the table in this position.

Note: Before you begin drilling, it's a good idea to check the angle once more, just to make sure the table didn't move when you tightened the clamp.

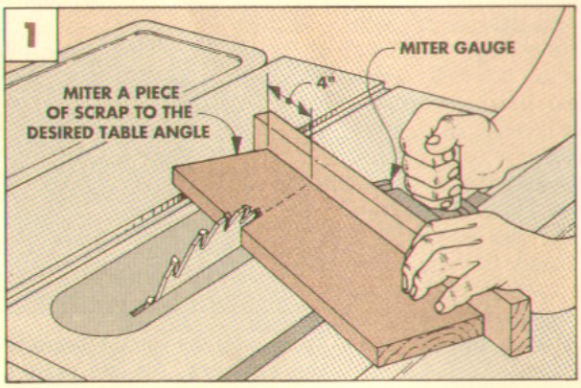

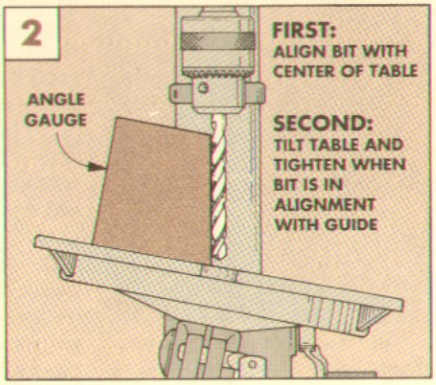

DRILL PRESS ANGLED PLATFORM

■ How do you drill angled holes with a drill press if the table doesn't tilt? Simple — you build an auxiliary table to tilt the workpiece, refer to Fig. 2.

ANGLED PLATFORM. To build an angled platform, start by cutting a pair of matching wedges from scrap so the mitered angle of the wedges matches the desired angle of the holes you need to drill, see Fig. 1.

Then glue and screw these wedges to a scrap piece of plywood. Now screw a second piece of plywood to this assembly as a platform for clamping the jig to the drill press table, see Fig. 1.

CENTER TABLE. Before you can use the platform, you'll need to center the table in relation to the chuck. (For information on how to do this, see the Shop Note above.)

POSITION PLATFORM. To use the platform, position it on the drill press table so the edge of the platform is *parallel* to the edge of the table, see Fig. 2. (If your table is round, orient the platform *perpendicular* to an imaginary line from the column through the bit.) Then clamp the platform to the drill press table.

Note: If you own a small drill press and need to drill angled holes in an oversize workpiece (like the seat of the Shop Stool on page 18), you can increase your drilling capacity by positioning the platform differently.

To do this, position the platform so it faces front-to-back on the drill press table, see Fig. 3. Then, before you clamp it in place, check to make sure the edges are properly oriented in relation to the table.

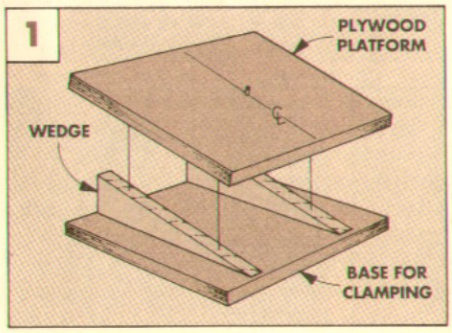

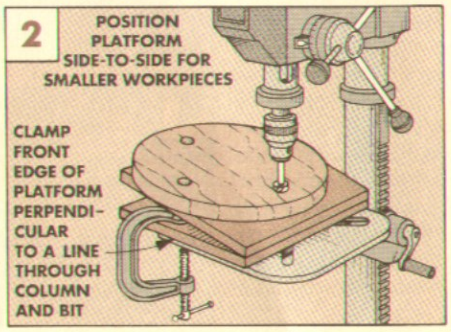

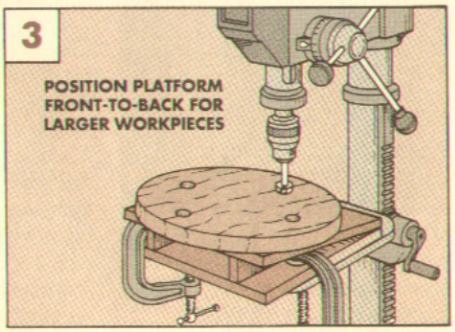

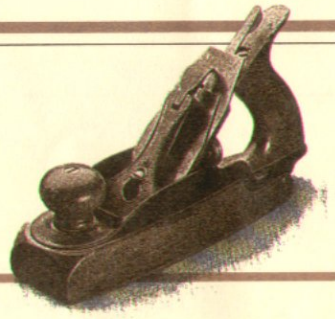

ROUTING INSIDE CHAMFERS

■ A frame and panel unit looks more finished if the inside edges of the frame are lightly chamfered (like on the Night Stand, page 6). But routing a chamfer on these edges is a problem if the unit is assembled — the panel interferes with the pilot bearing on a chamfer bit.

To get around this problem you can use a V-groove router bit instead. Since a V-groove bit has no pilot bearing, the panel can't interfere. Then, to substitute for the pilot bearing, attach a shop-built edge guide to the router.

An edge guide does two things. First, it keeps the bit a uniform distance from the frame edge. The guide also stops the router a uniform distance from the corners (¾" for this guide).

To make the edge guide, first replace the original router base with one made from ¼" Masonite, see Fig. 1. Then, for the the guide itself, cut another piece of ¼" Masonite 1½" wide by about 3" long, see Fig. 1. Align the edge of the guide with the center of the bit and glue the guide to the base.

Then turn on the router and raise the bit until enough is exposed to cut a narrow chamfer along the edge of the frame.

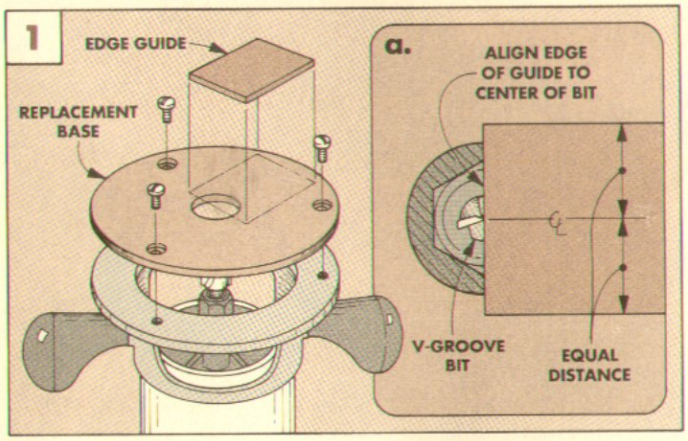

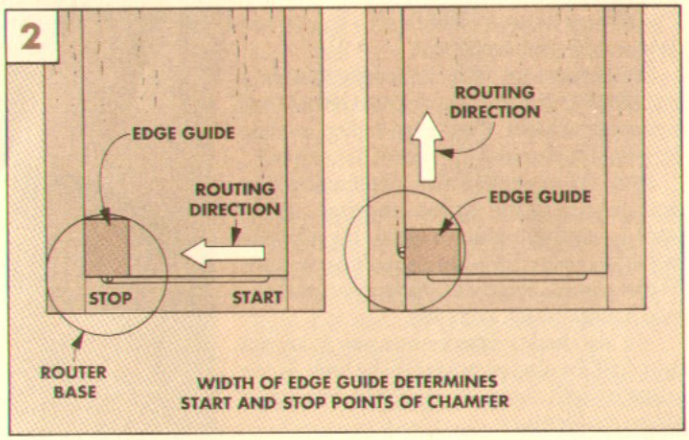

TRIMMING THROUGH TENONS

■ After assembling the Shop Stool (shown on page 18), I was faced with the problem of trimming the ends of the protruding tenons flush with the seat and the legs, see Fig. 1.

The reason this is tricky is that none of the tenons are trimmed flush to a *flat* surface. So the procedure I found to be most accurate is to trim the tenons flush in four steps using hand tools.

ROUGH-TRIM. The first step is to rough-trim the ends of the tenons with a hand saw, leaving about ⅛" protruding, see Fig. 1. This leaves less to be chiseled.

CHISEL FLUSH. Once the longest part of the tenon has been removed, the next step is to chop away the rest with a chisel. To prevent gouging the adjoining surface, work your way around the tenon, chiseling toward the center, see Fig. 2.

Note: Don't chisel so far that the tool exits the other side of the tenon. Also, to prevent the chisel from gouging into the tenon itself, hold the chisel with the bevel side *down*.

HAND SCRAPE. After the tenons are chiseled flush, they can be scraped. The slope on the seat is gradual enough that a straight scraper works fine here.

SAND SMOOTH. The final step is to sand the surface of the workpiece smooth. Again, it's best to do this by hand, not with a belt or pad sander. I used a sanding block made of scrap wood wrapped with sandpaper.

Using a sanding block lets you better direct the sanding pressure to the tenon, not the surrounding surface. An electric sander, with a larger sanding area, would reduce the surrounding (face grain) surface more quickly than the (end grain) tenon. This would result in a "dished" area around the tenon — not a tenon that's perfectly flush with the surrounding surface.

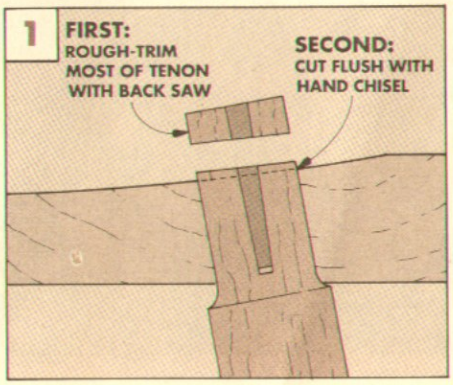

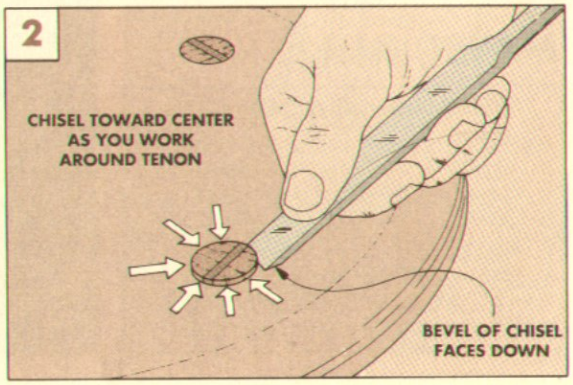

Shop Stool

What's the most intimidating part about building a stool? All the angles. But locating and drilling holes at an angle doesn't have to be difficult. That is, if you use the right technique — and jigs.

Recently, Steve, our shop manager, showed up in my office with a request. "I think it's about time to retire the old metal shop stools and get some new ones."

"Okay," I said, "but how about trying to build some ourselves." I was thinking that I've always wanted to work on a way to hollow out the seat for a stool.

Steve took up the challenge. Within a couple days, he and Ken (our designer), had a prototype stool. (And even talked me into helping them make the rest of the stools.)

JIGS. As expected, the challenging part was designing the jig for scooping out the seat — without using a lathe. It's all done with the router riding on a couple of runners. We've done a separate article about making and using this jig, see page 22.

We also had to figure out a way to lay out and drill the angled holes for the legs. So we came up with some simple jigs to get around these problems.

One of the jigs ensures that the holes are drilled at the correct location and angle. Then there's a neat way to draw lines centered on the legs for the stretcher holes.

HEAVY DUTY. We wanted the stool to be strong — so it's built with wedged mortise and tenon joints. Not only are these joints incredibly strong, the wedges are exposed, so they look good too. (And it gave me a good excuse to try another technique, see separate article on page 24.)

To make sure this stool holds up as long as the old metal ones, we used solid oak throughout. (For sources of oak dowels, see page 31.) Then a contrasting wood (walnut) is used to accent the wedged tenons.

MATERIALS

OVERALL DIMENSIONS : 14"W x 26"H

A	Seat (1)	1 1/16 x 14 dia.
B	Legs (4)	1 1/4" dowel - 26 1/2
C	Upper Stretchers (2)	7/8" dowel - 12 1/16
D	Lower Stretchers (2)	7/8" dowel - 12 13/16
E	Wedges (12)	1/8 x 1 1/4 rgh

- 2 Bd. Ft. of 1 1/16"-thick Red Oak
- (1) Pint of General Finish Sealacell
- (1) Pint of General Finish Arm-R-Seal

SEAT

I began work on the stool by building the seat. It starts out as a square blank and then can be cut or turned to a perfect circle.

SEAT BLANK. To make the **seat (A)**, start by gluing up enough 1 1/16"-thick stock to make a 15"-square blank. Then trim the blank to 14½" x 14½", see Fig. 1.

Now draw a pair of diagonal lines on *both* sides of the blank, see Fig. 1. The intersection of these lines will locate a centerpoint on the blank (for cutting the 14"-diameter circle) and help in laying out the position of the four leg holes. Mark the position of each hole 4½" from the centerpoint on the *top* face of the blank, see Fig. 1.

After the holes are laid out, cut or turn the seat round. (Note: If you're turning the seat on a lathe, you can also "scoop out" the center and shape the edges, refer to Fig. 4.)

LEG HOLES. Once the seat is cut round, the holes can be drilled for the legs. (To make the stool as stable as possible, the legs are splayed out in all four directions.)

There are a number of steps to doing this. First, the opposing leg holes have to be aligned *directly* across from each other during drilling. To do this, I made a simple jig.

INDEXING JIG. The jig is just a piece of plywood with a ¼" dowel that acts as a pivot pin for the seat, see Fig. 2. By rotating the seat on this pin you can align the diagonal marks on the seat with a centerline on the jig. This ensures the holes will be drilled in a line *and* an identical distance from the center.

To be able to use this jig, you'll need to first drill a ¼"-deep hole for a pivot pin centered on the *bottom* of the seat, refer to Fig. 4. Also, extend the reference lines on the seat blank down the edges of the blank, see Fig. 3.

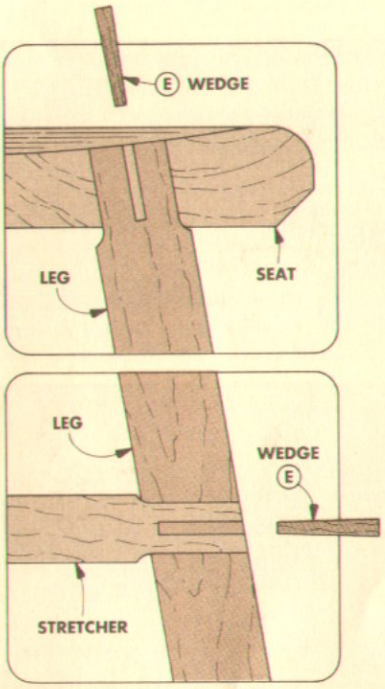

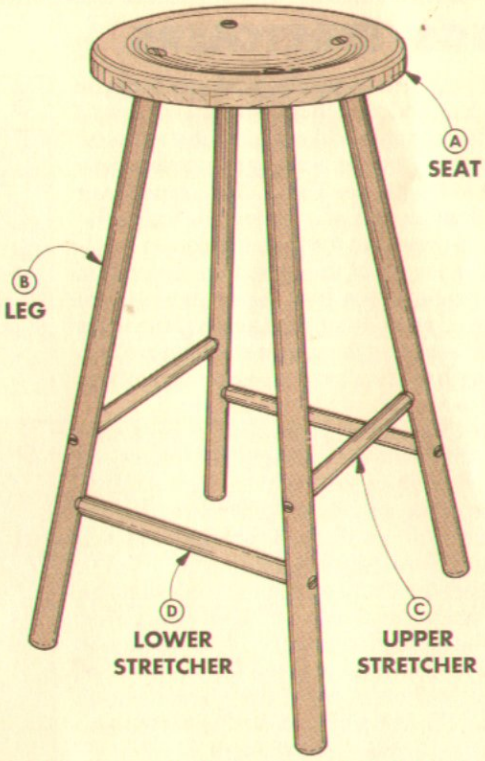

TILT TABLE. The next step is to tilt your drill press table to 10°. Note: If your table doesn't tilt, you can make a platform to tilt your workpiece. (For more on drilling angled holes, see Shop Notes on page 16.)

DRILL HOLES. Now place the seat face-up on the pin of the indexing jig and rotate it until a diagonal line on the seat lines up with the centerline on the jig. Here's the tricky part — positioning the jig on the tilted table.

To do this, line up the center of your drill press table with the point of your 1" drill bit. Then, adjust the front edge of the jig so it's perpendicular to a line through the bit and the center of the drill press column. And clamp the jig to the table so the bit is *directly* over one of the leg layout holes, see Fig. 3. Now drill the four holes, rotating the workpiece (not the jig) between drilling.

SHAPE SEAT. After all four holes are drilled, the seat can be removed from the jig and given its final shape. First, I scooped out the seat profile using the jig shown on page 22. Then, round over the upper edge with a ½" round-over bit and bevel the lower edge with a chamfering bit, see Fig. 4.

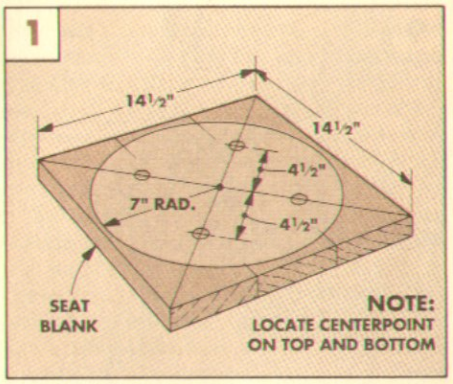

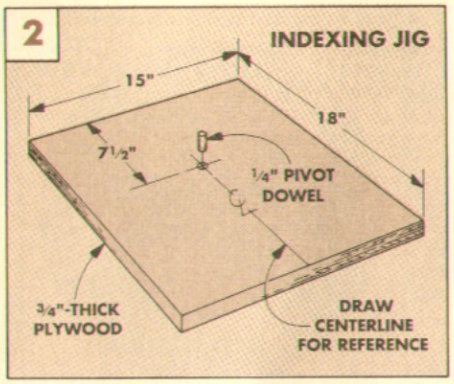

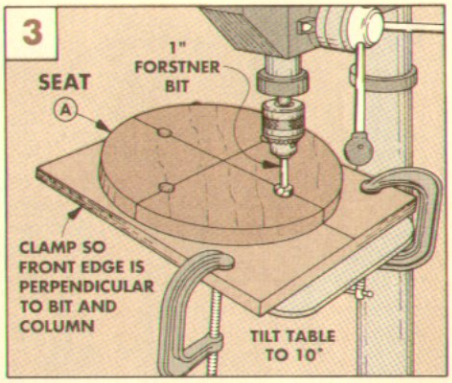

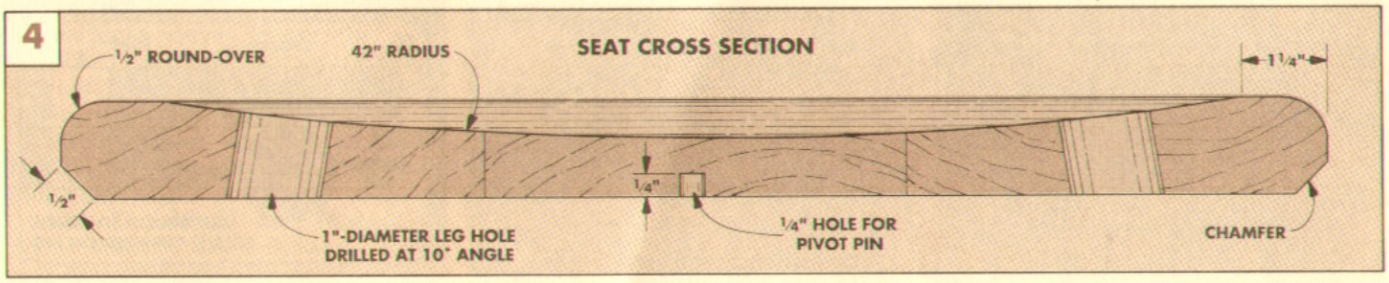

LEGS/STRETCHERS

With the seat complete, work can begin on the legs and stretchers. I used 1¼" dowels for the legs and ⅞" dowels for the stretchers.

CUT TO LENGTH. Start by cutting four **legs (B)** to length, see Fig. 5. Next, round over the bottom end of each leg (B) with a ⅜" round-over bit in the router table.

The length of the stretchers depend on the angle of the legs. Since the legs are splayed at 10° (that's the angle of the holes in the seat), cut the **upper stretchers (C)** to a length of 12 1/16", and the **lower stretchers (D)** to a length of 12 13/16", see Fig. 5.

ROUND TENONS. Once the legs and stretchers are cut to length, the tenons can be cut on the *top* ends of the legs and *both* ends of the stretchers. (For more information on cutting wedged round tenons, see the article on pages 24 and 25.)

Since the 1¼" legs fit into 1" holes and the ⅞" stretchers fit into ⅝" holes, I routed ⅛" off the circumference of each to produce 1" and ⅝" round tenons, see Fig. 6. Note: Set the router bit to cut *slightly* less than ⅛" deep. Then file or sand each tenon to fit its mortise. (Dowel sizes will vary.)

After the tenons are cut, they can be kerfed to receive the wedges. I used a kerfing jig to do this, see Fig. 7.

LOCATE STRETCHER HOLES. The next step is to locate the holes for the stretchers. This could be the trickiest part to this project, but I simplified the task by making an assembly platform (see Fig. 8), and a simple marking gauge (see Fig. 9).

The assembly platform is a plywood square with four holes, see Fig. 8. The legs are inserted in the holes to hold them at the correct angle for marking the stretcher holes.

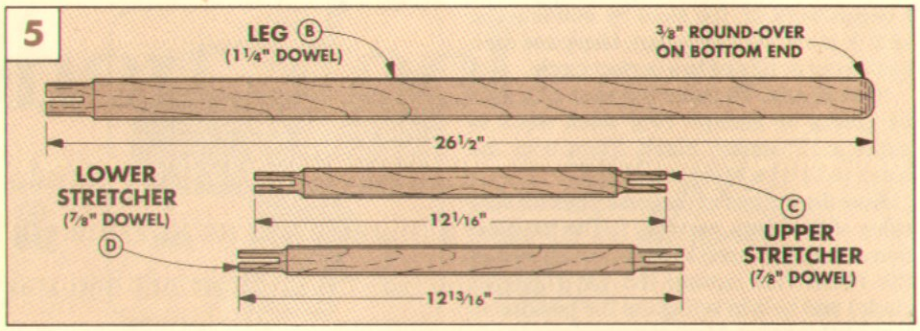

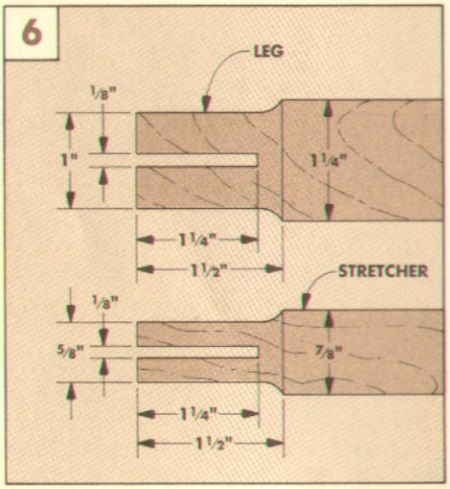

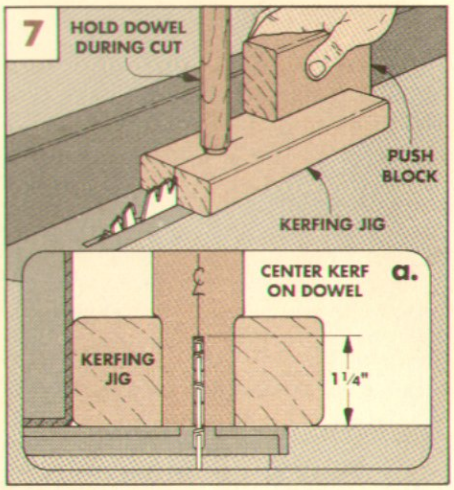

Note: For appearance, I rotated the legs so the kerfs on *opposite* legs are parallel to each other, see Fig. 8a.

MARKING GAUGE. The marking gauge consists of a long guide bar, a spacer, and a pencil, see Fig. 9. When taped together they form a self-aligning marking gauge for drawing lines centered on the legs. The key is the spacer — it's cut so the pencil lead hits the center of the leg, see Fig. 9a.

To draw a line centered on a leg, hold the gauge so the guide bar touches *both* legs, see Fig. 9. Then, move the gauge up and down to make a mark.

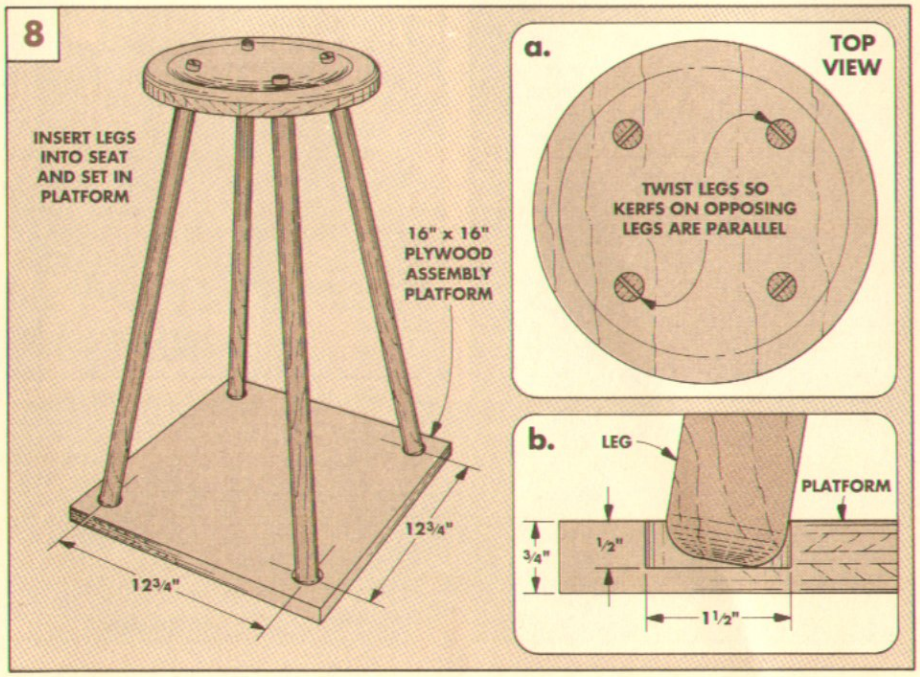

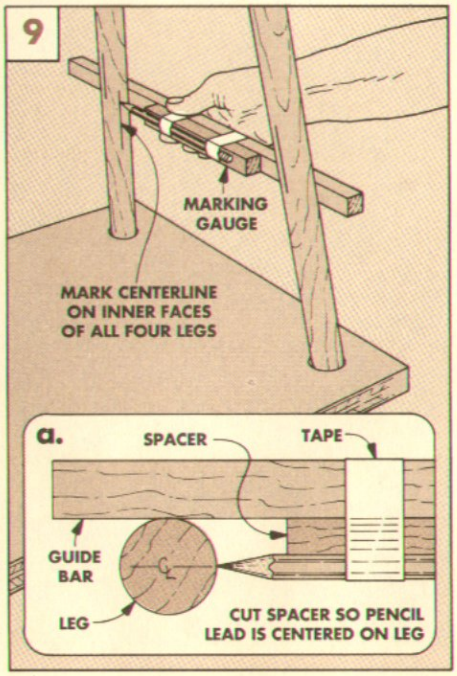

LEGS/STRETCHERS CONTINUED

Once the centered lines have been drawn on the inside faces of the legs, the next step is to mark the locations (height) of the stretcher holes on these lines. To prevent the holes from weakening the legs, I offset the upper and lower stretchers by 3", see Fig. 10a.

MARK STRECTHER HOLES. To mark the upper stretcher holes, measure 9" up from the bottom of opposing legs and make a mark, see Fig. 10a. Then, measure 6" up on the remaining lines and make a mark to indicate the lower stretcher holes.

One thing before drilling the holes. The location of the holes (9" and 6" up) are dependent on two things: the angle of the leg holes drilled in the seat, and the shoulder-to-shoulder distance of the stretchers.

Since it's easy to be slightly off on one of these measurements, it's a good idea to hold the stretchers alongside the legs and "eyeball" them to see if the stretchers align with your marks. There's some forgiveness, but if they're way off, you may need to reposition the stretcher holes.

DRILL STRETCHER HOLES. To drill the stretcher holes, I first made a simple jig to hold the round legs steady while drilling. The jig is just a piece of scrap wood with a 5/8"-wide groove, see Fig. 11a.

To use the jig, first tilt the drill press table to 7°. Then, clamp the jig to the table so the groove is centered under a 5/8" bit and square to the edge of the table, see Fig. 11. Now drill a hole in each of the marked locations. Note: The tenoned end of each leg is at the high end when drilling these holes.

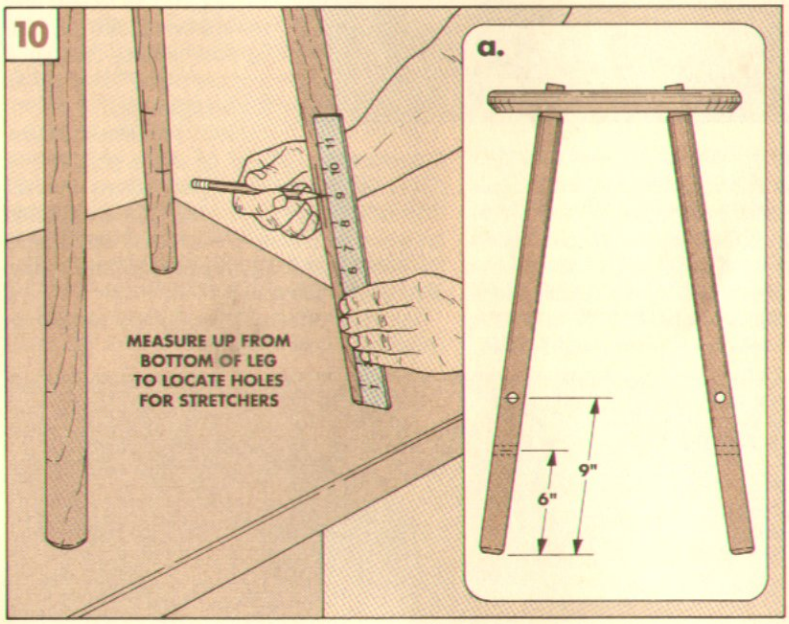

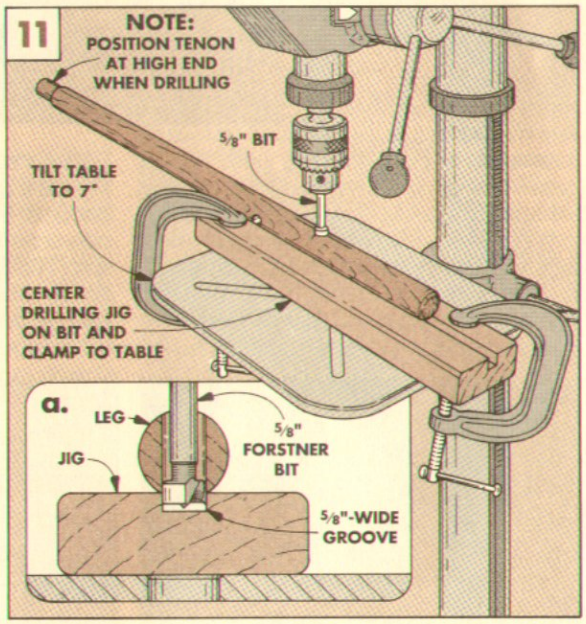

ASSEMBLY

Now that the holes are drilled, the stool can be assembled. To do this, apply a slow-setting glue to the upper and lower stretchers and insert them into the legs. Then, set the legs back into the assembly platform and rotate each stretcher so that all the kerfs in the tenons line up horizontally, refer to Fig. 13.

Next, apply slow-setting glue to the leg tenons, and push the seat onto the legs, see Fig. 12. Note: I used a rubber mallet to assist these tenons into the mortises, working around the seat until the tenons bottomed out on their shoulders.

WEDGES. The next step is to cut and trim the wedges for the tenons. For more on cutting and fitting wedges, see page 25.

To insert the wedges, first apply glue into each kerf. Then, drive a wedge into each of the tenons, see Fig. 14.

Now the tenons and wedges can be trimmed flush. For more on this process, see Shop Notes, page 17.

FINISH. To finish the stool, I wiped on a coat of General Finishes Sealacell and two coats of Arm-R-Seal.

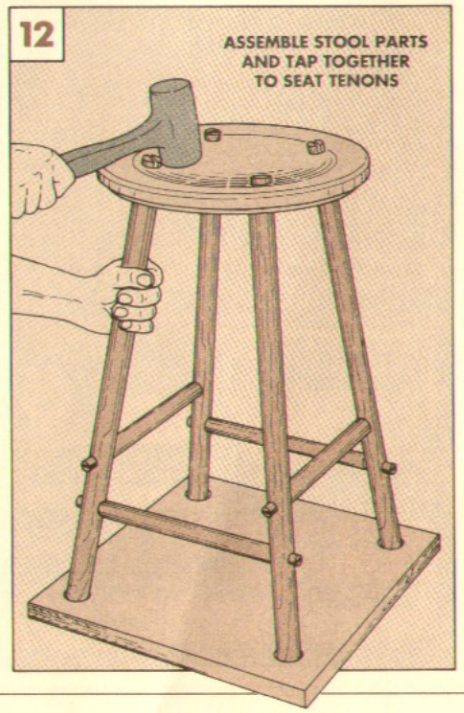

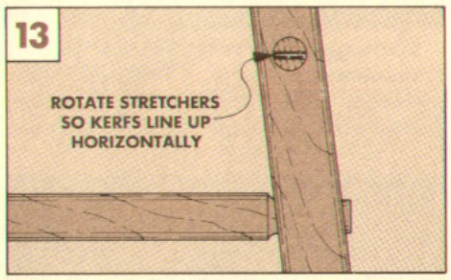

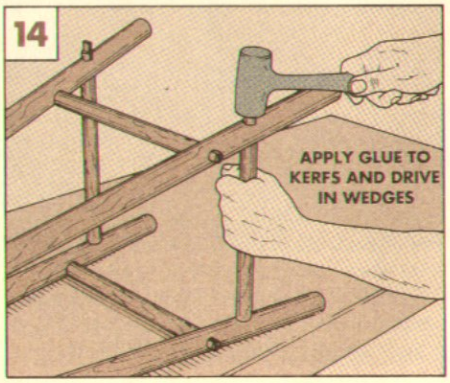

Seat Scooping Jig

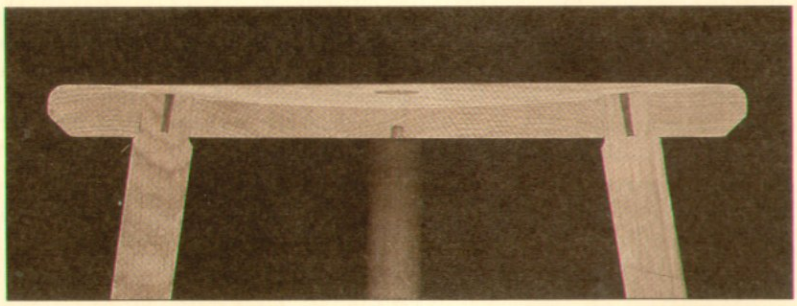

How do you make a hardwood stool comfortable to sit on? Traditionally, you might scoop out the dished seat with a scorp or inshave. (Or you could simply add a cushion.)

For the Shop Stool shown on page 18, I wanted a *uniformly*-contoured seat that's nearly impossible to get with hand tools. What I came up with was a way to shape the seat using a router and a special scooping jig.

With this jig, the router moves like a pendulum — but it's not suspended from above. Instead, the router rides "roller coaster" rails over the workpiece. And the workpiece is rotated between cuts, see photos below.

RAIL PROFILE. When you use this seat scooping jig (or another like it for a different-size seat) the *shape* of the profile on the side rails determines the shape of the contoured seat. The *radius* of the profile controls how deeply the router cuts. And a replacement base on the router keeps it on the rails and cutting in a straight line (see drawings below).

OPENING. What makes this jig work so well are two features that control the workpiece. First, there's an opening for the seat blank on the bottom of each rail. So when the workpiece is slid into the jig (like putting bread in a toaster) it can't rise up as it's being shaped.

PIVOT PIN. But the most important part of this jig is the smallest — the ¼" dowel the workpiece pivots around. The dowel lets you rotate the workpiece between overlapping cuts, and also keeps the seat blank from creeping around on the platform as you rout.

So what you end up with is a smoothly-contoured seat.

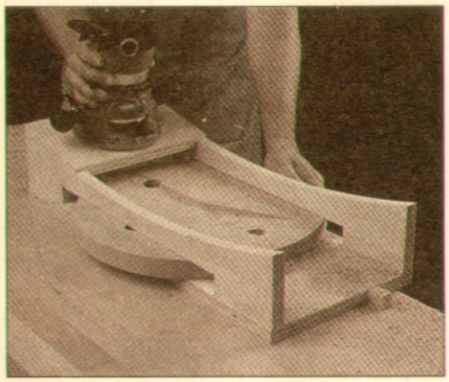

Openings in the side rails hold the seat blank down on the jig. A removable pivot pin keeps it from creeping. Your free hand prevents it from rotating as the router cuts.

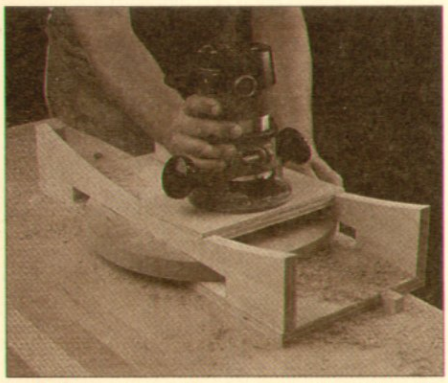

Riding along the curved rails of the jig, the router cuts more deeply into the center of the blank than the edges. This produces a smooth, uniformly-contoured seat.

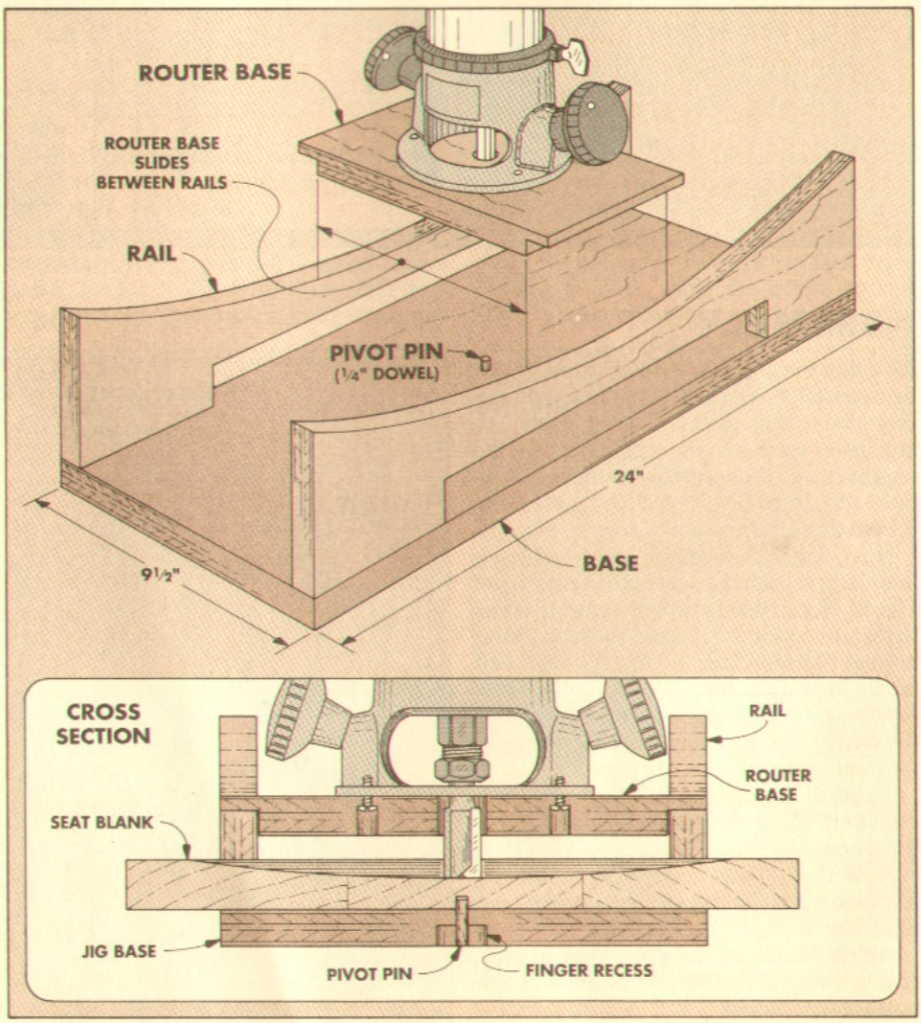

MAKING THE JIG

There are two things that affect how you make this seat scooping jig. The first is the size (thickness and diameter) of the seat blank. Then there's the question of how deep you want the "scoop" to be.

I built the jig shown here for the Shop Stool. The seat is 14" in diameter and the scoop 3/8" deep at its centerpoint. Also, I wanted to leave a 1¼"-wide flat rim around the top of the seat.

The jig consists of a base with a pivot pin that holds the workpiece, and a pair of curved rails for the router to ride on. Then, to steady the router as it slides along the rails, a plywood base is attached to the router. (All the plywood parts are ¾"-thick.)

CURVED RAILS. Start the jig by making a pair of side rails. To do this, first cut two rectangular pieces of plywood to the same size, see Fig. 1. Now draw an arc with a radius of 42" on one of the rail blanks.

Next, temporarily sandwich the blanks together (I used double-sided carpet tape) and cut the arc on both pieces at the same time. Then lay out and cut the openings on the bottom of the taped-together blanks for the workpiece to fit in, see Fig. 1a.

BASE. Once the rails are cut out, the next step is to make the base that the curved rails are attached to. To do this, first rip a piece of plywood to width, see Fig. 2. Then cut this to the same length as the curved rails. Now the rails can be glued and screwed to the base.

PIVOT PIN. After the rails are screwed down, bore a hole for a removable pivot pin in the base of the jig, see Fig. 2. To make it easier to insert and remove this pin, counterbore a 1" hole on the bottom side of the base, see Fig. 2a.

ROUTER BASE. To make a base for the router, first cut a piece of plywood to the same length as the jig base is wide (9½"). Now drill a 1"-dia. hole centered on the plywood for the bit.

Next, remove the plastic base from your router and use it as a template to mark the position of the counterbored screw holes for mounting the base to your router.

Complete the router base by cutting rabbets on its *bottom* face, see Fig. 3a. The rabbets prevent side-to-side movement of the router on the rails.

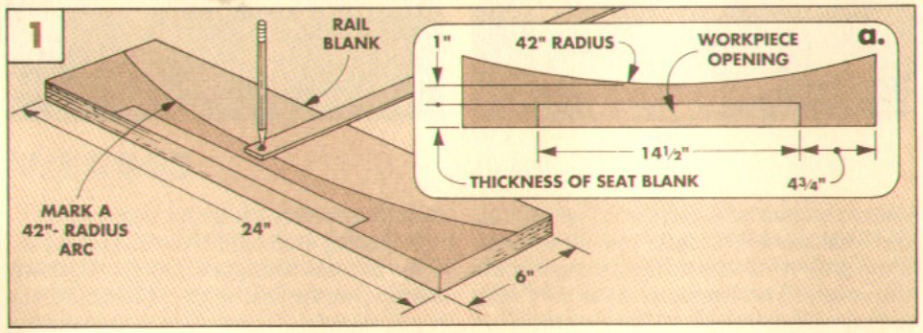

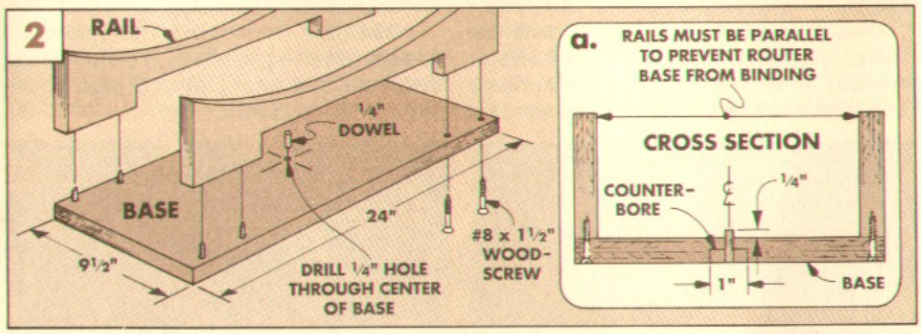

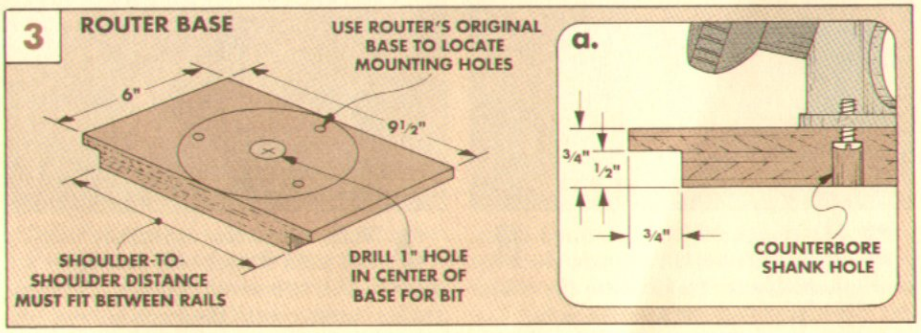

USING THE JIG

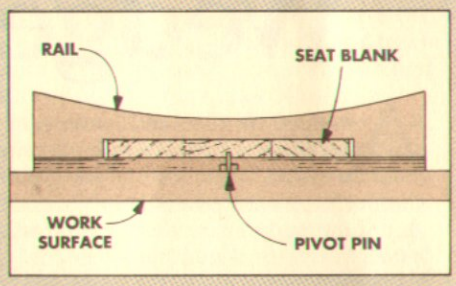

1 *Slide the seat blank into the opening between the jig base and side rails. Then push the pivot pin up through the base into the centerhole in the workpiece.*

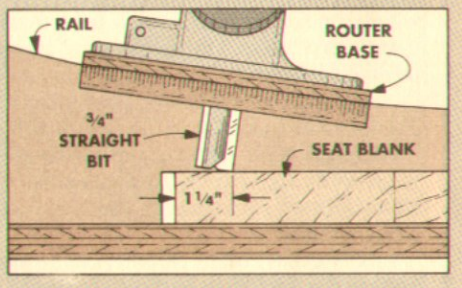

2 *Mount a ¾" straight bit in the router and set the router across the rails. Adjust the cutting depth of the bit so it enters the workpiece 1¼" from the edge.*

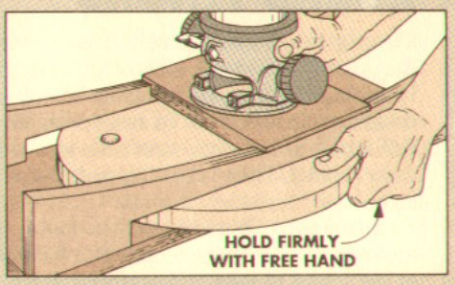

3 *The spinning router bit will turn the workpiece, so hold the piece firmly as you advance the router. Or you can use wedges to hold the seat blank in position.*

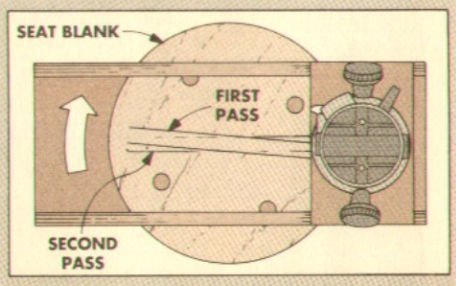

4 *After making one pass with the router, rotate the workpiece and make another. For best control of the workpiece, all successive cuts should overlap slightly.*

Wedged Round Tenons

A wedged mortise and tenon joint is incredibly strong. The strength comes from the wedge. The tenon isn't just glued in the mortise, it's *locked* in place with a wedge. And if the wedge is made of a contrasting wood, the exposed joint looks good too.

A variation of this joint, the *round* wedged mortise and tenon, has another advantage — it's easy to make. For the tenon, you can use a dowel. And the mortise is simply a hole drilled in the workpiece. (Note: The wedge is especially important on *round* tenons which can shrink and cause the joint to fail.)

ROUND TENONS. The tricky part of making this joint is finding a way to cut a round tenon on the end of a round dowel. The easiest way I've found to do this is on the router table.

Although we're showing curved shoulders made with a core box bit (they soften the transition between round parts), you could use a straight router bit.

KERFS AND WEDGES. Another challenge is cutting the kerf, then cutting a wedge to fit the kerf. But both of these have simple solutions, refer to the next page.

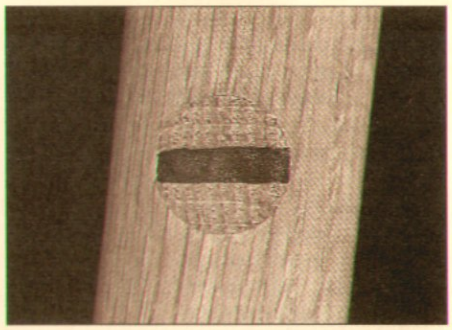

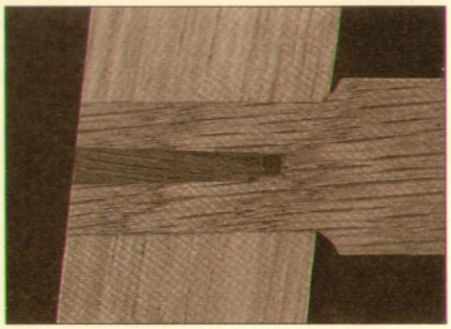

ROUND TENONS

Cutting tenons on dowels is easy when they're cut on a router table. The tricky part is finding dowels that are truly round and consistent in diameter. To avoid problems, I drill a hole in a block to match the size of the dowel I need. Then I take this to the store as a gauge to help select dowels.

GUIDELINES. With dowels in hand, the next step is to size the tenon. The diameter of the tenon is easy to determine. It has to match the mortise (hole) that it's going into. But what about the length? I cut the tenon so it will project ¼" beyond the mating piece in the joint. (For example, I cut 1½"-long tenons on the stretchers of the Shop Stool on page 18. They pass through 1¼"-thick legs.)

SET-UP. To cut the tenons, first cover the throat opening on your router fence with an auxiliary fence, refer to Step 2. Then, clamp a support block to the table so the dowel is centered over the router bit, see Step 1.

Adjusting the height of the bit is a trial and error process. Using a scrap dowel, slowly sneak up on the final height. When the tenon is just slightly oversize to fit in the mortise, stop and sand the tenon for an exact fit.

TECHNIQUE. To rout the tenon, push the dowel into the bit, see Step 2. Then pull the dowel out, rotate it slightly and push it back into the bit, see Step 3.

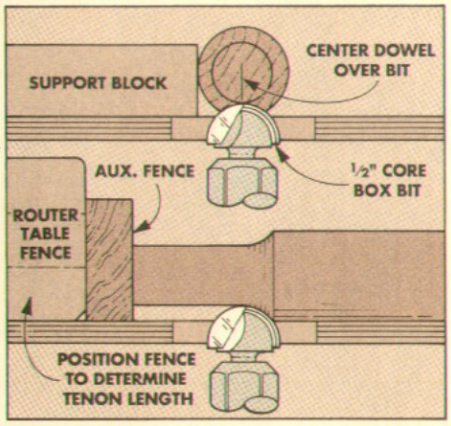

1 *Adjust height of router bit to cut tenon slightly larger than mortise. Then position the auxiliary fence to determine the length of the tenon.*

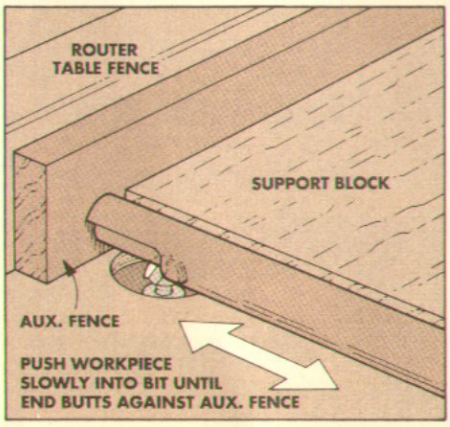

2 *The support block positions dowel over bit. To start the tenon, push the workpiece slowly straight into the router bit. Then, pull the workpiece back out.*

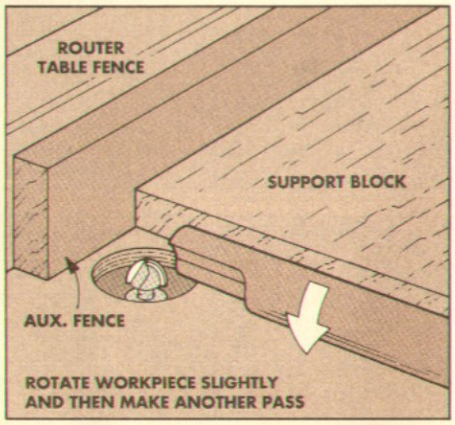

3 *Next, rotate the workpiece slightly and push it back into the router bit. Then pull it out and rotate again. Continue in this manner until the tenon is complete.*

KERFING THE TENON

Once the tenon is cut to size, the next step is to cut a kerf for a wedge in the end of the tenon. To prevent this wedge from splitting the workpiece when it's driven in, the kerf is cut 90° to the grain direction of the tenon, refer to Step 5 and photo on opposite page.

GUIDELINES. Besides orienting the kerf to the grain, you'll also need to determine the width and depth of the kerf. On tenons greater than ½"-thick, I cut an ⅛"-wide kerf. To do this, I cut the kerf on the table saw since most carbide-tipped blades are about ⅛"-thick. Note: If you're working with a small tenon and a thin kerf is required, you can cut it on the band saw or with a hand saw.

To determine the depth of the kerf, insert the tenon in its mortise and make a mark near the shoulder of the tenon where it bottoms out in the mortise. Then make sure that your kerf doesn't go below this mark.

SET-UP. To cut kerfs on the table saw, I made a simple jig — a 2x4 laid on its face with a hole drilled in it the same size as the tenon, see Step 4. The jig rides against a rip fence that's positioned so the blade will cut a kerf directly through the center of the hole.

TECHNIQUE. Insert a dowel in the hole, and push it through the blade, see Steps 5 and 6. Note: Don't twist the dowel during the cut — it may bind and cut a jagged kerf.

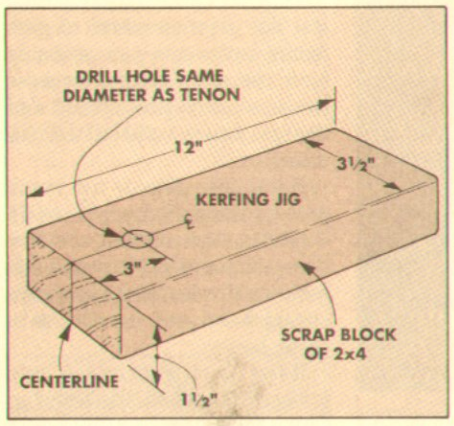

4 *To make a kerfing jig, draw a line centered on the length of a scrap piece of 2x4. Then, drill a hole centered on this line to accept the tenon.*

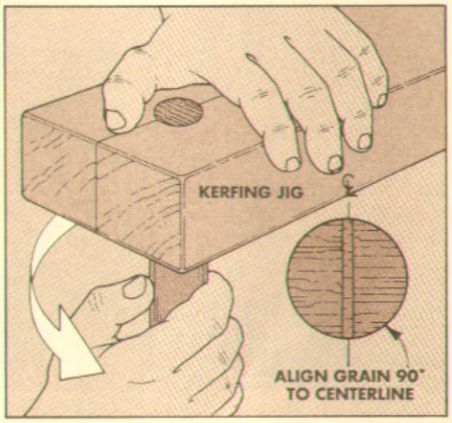

5 *To cut a kerf, first insert a tenon in the kerfing jig and turn it upside down. Then, twist the workpiece so the end grain of the tenon is 90° to the centerline.*

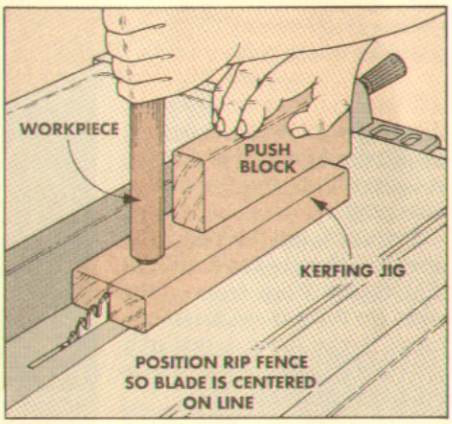

6 *Position rip fence to cut a kerf down the centerline of the jig. Then, push the jig and workpiece past the blade by gripping the dowel and using a push block.*

WEDGES

Now that kerfs are cut in the tenons, the final step is to cut and fit the wedges. Even though the concept of a wedge is simple, cutting the perfect sized wedge can be quite a challenge. That's because there are three variables to any wedge: length, thickness, and taper — and each one affects the other, see Step 7.

GUIDELINES. Fortunately, there's a simple solution to this problem. I cut the wedge so its bottom is slightly less than the width of the kerf. Then I experiment with the taper angle until the wedge spreads the tenon and locks it tight in the mortise, see Step 7. (On the Shop Stool, I used a taper angle of 3°.)

There's one more thing to consider about wedges — grain direction. To keep wedges from breaking, the grain should run parallel to the sides of the wedge, see Step 7.

SET-UP. To set up your saw, first position the rip fence so the distance between the blade and the fence is slightly less than the width of the kerf in the tenon. Then, tilt the blade to the desired angle (3° in my case).

TECHNIQUE. Cut the wedges to length on the table saw, see Steps 8 and 9. Then, split the wedges to width with a chisel. Next, apply glue to the tenon and kerf and insert the tenon in the mortise. Align the kerf, and drive the wedge in place. (For details on trimming tenons, see page 17.)

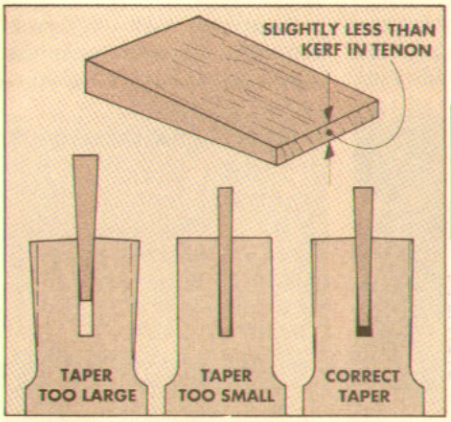

7 *Wedge is cut so bottom is slightly less than width of kerf. Then a taper is chosen to spread tenon tight in mortise while providing maximum gluing surface.*

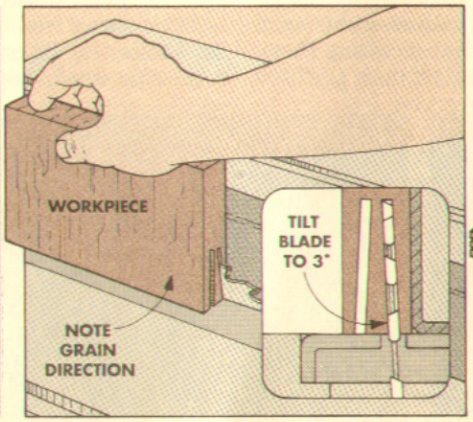

8 *To cut taper, first position rip fence so distance between blade and fence is slightly less than kerf in the tenon. Then tilt blade and push workpiece along fence.*

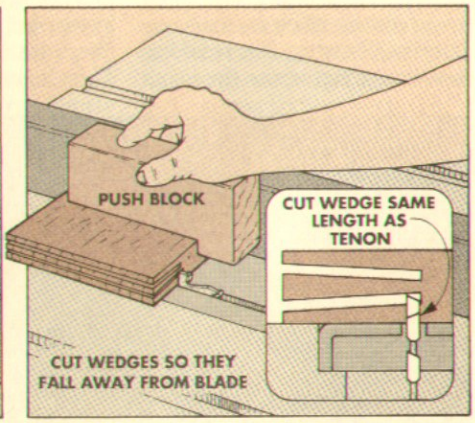

9 *Then, cut wedges to length. Position the rip fence so the wedges fall off to the left of the blade. This keeps them from binding between the blade and fence.*

Talking Shop

GLUE JOINT FAILURE

■ *The glue joints on a project I made a few months ago have failed. Is there any way this could have been prevented?*

Dan Wieland
Thatcher, Arizona

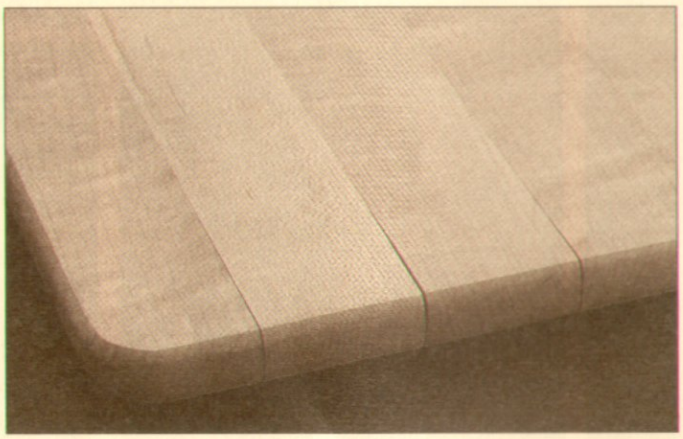

When glue joint failure occurs, it's usually thought that the glue is the problem. But the glue is rarely at fault.

"As long as the shelf life of the glue hasn't been passed, and the glue hasn't been frozen, the odds are the glue is okay," explains Bryan River, a research scientist at the USDA Forest Products Laboratory.

Bryan suggests that the most common problem he encounters is incorrect pressure when clamping the joint. But glue joint failure can be caused by the glue surfaces not being properly prepared, or by changes in the moisture content of the wood.

MOISTURE CONTENT. Quite often wood is stored outside then brought into the shop to be worked. If the wood is immediately cut and glued, the moisture content of the wood may not have fully adjusted to the drier conditions of the shop.

Eventually, the moisture content of the wood *will* adjust to the indoor conditions. And since wood moves when its moisture content changes, the resulting movement can stress the joints and cause them to fail.

So it's best to give your wood plenty of time to adjust to the conditions of your shop. In most cases, a couple weeks is enough for kiln dried lumber.

GLUE SURFACES. Another common cause of glue failure is that the surfaces to be glued aren't machined properly. "Some woodworkers think the best glue surface is one that has been roughened up by sanding," explains Bryan. "That's not true. It's better to have a surface that has been cleanly severed by a cutting knife such as a sharp plane or jointer."

Dull table saw blades or jointer knives crush the wood fibers instead of slicing them. This leaves torn or partially detached fibers. This results in a poor gluing surface.

The glue will bond to surfaces like these, but when the joint is stressed, the fibers will separate and the joint will fail.

There is one time when I might consider lightly sanding the glue surfaces. If you can't glue up the pieces for a period of time after you cut or plane them, it's best to expose a fresh edge with a sanding block and some 220 or 320 grit paper.

The reason for doing this is because after a couple of weeks the surfaces start to get covered with dust or pollutants from the air. "An older surface is less *wettable* than a freshly cut surface" is the way Bryan explains it. "In other words, liquids don't spread or penetrate as easily."

GLUE & CLAMPING PRESSURE. But the greatest cause of glue failure is the one you probably have the most control over — the amount of glue spread and the pressure applied to the clamps.

If too little glue or too much pressure is applied, you'll end up with a starved joint — one that doesn't have enough glue solids between the surfaces to create a strong bond, see board (A) in photo below.

If too much glue or too little pressure is applied, you'll end up with a thick glue line, see board (C) in photo below. As the glue dries, the adhesive will shrink leaving voids or air bubbles in the glue line.

DOUBLE SPREAD. When gluing, I spread a thin, consistent layer of glue to both surfaces, see photo bottom left. This ensures that both surfaces will be fully wet and there won't be any spots without glue.

Then, apply pressure to the joint by tightening the clamps until an even line of glue seeps out between the boards — and stop, see board (B) in photo below. Don't give the clamps an extra twist because it won't give you a stronger joint — it'll probably make the joint weaker by squeezing out too much glue.

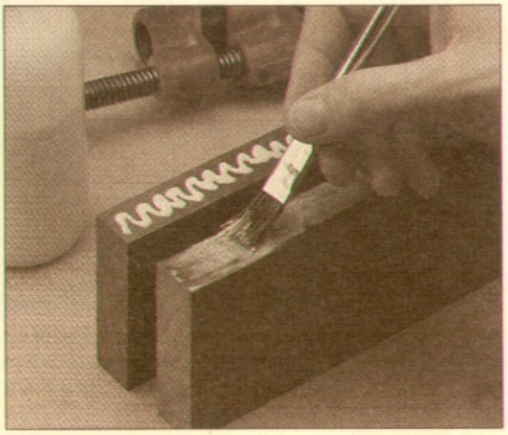

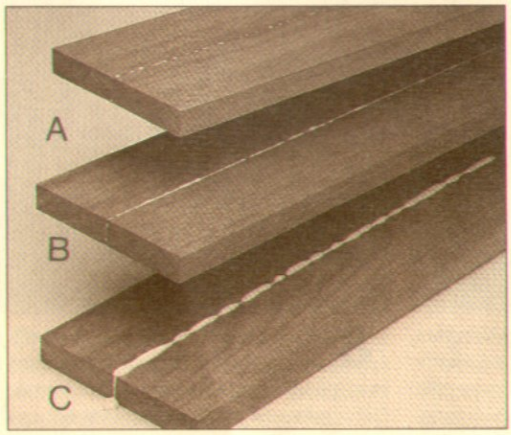

PROBLEM? QUESTION?

Solving a problem (or avoiding one in the first place) is part of every project. But the best solutions aren't always obvious — they often come from one who's faced the problem before.

If you have a problem, solution, question, or even a gripe, maybe we (or another reader) can help. Just write to *Woodsmith*, Talking Shop, 2200 Grand Ave., Des Moines, Iowa 50312.

THIN TABLE SAW INSERTS

■ Woodsmith *always shows ½"-thick table saw inserts that fit into cast iron tops. But my saw has a thin steel top which requires a ⅛"-thick insert. Any ideas on how can I make an insert that's both thin and strong?*

Tim Willis
Atlanta, Georgia

The tricky part to making a thin insert is to find a material that's the correct thickness, but still strong and dimensionally stable.

MATERIALS. I found two materials that work well: phenolic (a very strong and durable plastic) and aircraft plywood.

Since only a few plastics distributors sell small pieces of phenolic, we're offering ⅛", 3/16", and ½"-thick blanks, see page 31. Aircraft plywood is available at most hobby stores.

CUT TO SHAPE. To make an insert, begin by tracing the outline of the original insert onto the thin blank, see Fig. 1. Then cut it to shape and file or sand to fit.

Or you can use the original insert as a template and cut it to size with a flush trim bit.

To add weight and support to either insert, you may want to glue a stiffener cut from ¼" Masonite to the bottom, see Fig. 2.

Then to make it easy to get the insert out of the saw table, drill a finger hole at one end, see photo.

THICK INSERT. Instead of using a thin material, another method would be to start out with a thicker material and then rabbet the edge, see Fig. 3.

CUT THE SLOT. To cut the slot for the saw blade, start by lowering the blade completely. Then, to hold the insert in place, tighten down the rip fence over the insert (not the blade), see Fig. 4. Now turn on the saw and *slowly* raise the blade through the new insert.

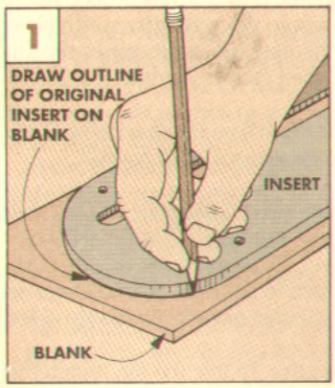

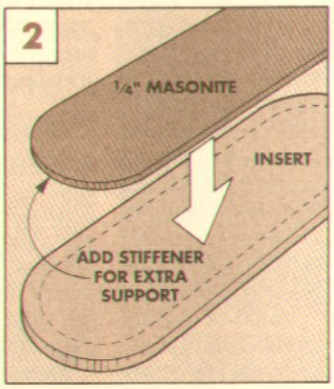

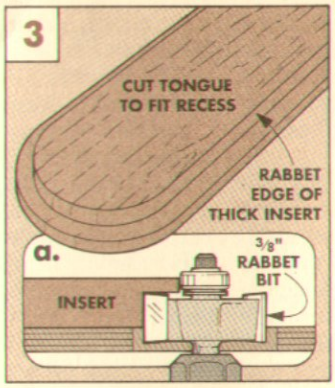

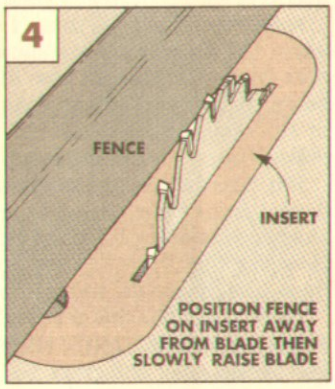

CASE HARDENING

■ Scott Welsh from Cogan Station, PA read our response in *Woodsmith* No. 74 to another reader's question — why wood sometimes bends as it's ripped.

And we indicated that he had probably encountered reaction wood — wood that's cut from a leaning tree.

But Scott notes there's another possibility besides reaction wood. "It's also possible for this same problem to occur because your lumber has not been properly dried.

"Since moisture must leave a board from the outer surfaces, as the board dries the center will have a higher moisture content than the outer surfaces — a condition called case hardening, see figure below.

"This produces internal stresses in the board and the end result might be a crook or edge bend when the board is ripped.

"When kiln operators dry lumber, they introduce steam into the chamber of the kiln at the end of the drying cycle. The steam penetrates the surface of the lumber and equalizes the moisture content throughout the board. This final step in drying the wood is called conditioning.

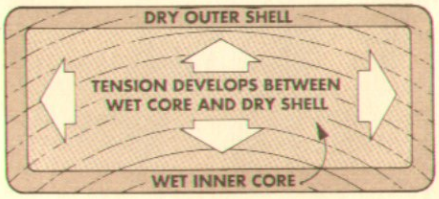

"One way kiln operators test to see if their lumber is properly conditioned, is to cross-cut a 1"-wide test piece from the center of a board that's randomly selected from the stack.

"Then this test piece is cut into the shape of a tuning fork, see Fig. 1. To cut this shape, they make two equally spaced cuts through the *thickness* of the piece with a band saw.

"If the lumber was properly conditioned, the remaining prongs won't diverge more than 1/16" when the center prong is removed," see Fig. 1.

"If the test piece *does* diverge more than a 1/16", the lumber is case hardened and the kiln operator will continue with the conditioning process until a new test piece shows the lumber is OK."

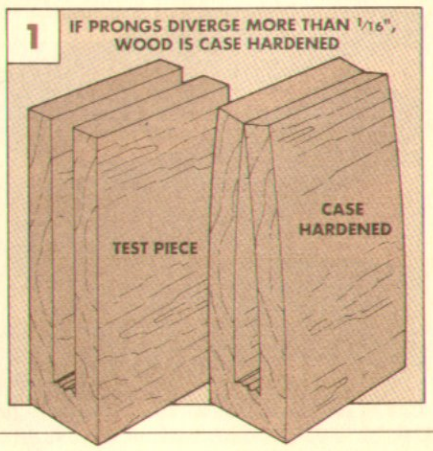

Edge Jointing Basics

What's the secret to gluing up panels so the joints are strong and nearly invisible? The answer lies in the edges. Boards with straight, smooth, square edges glue up into flat panels with strong joints that are hard to see.

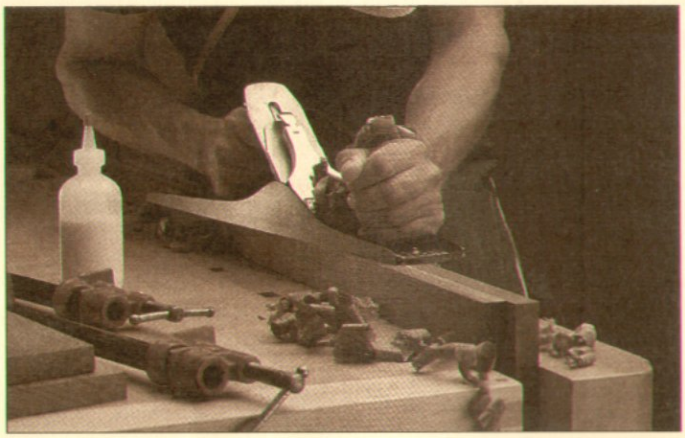

BUYING WOOD

The job of making a good joint actually starts at the lumber yard. I usually purchase lumber for panels with both faces planed smooth. (This is called S2S, or "surfaced two sides.") This makes it easier to select boards that have similar color and grain pattern.

WARPING. The next thing I look for is warp. The drawings below show four common types. Boards with bow (the face of a board curls in a "U" shape along its length) or twist (opposite corners curl up) can be difficult to use for making panels.

But boards that are crooked (flat, but curved along their edges) or cupped ("U" shaped across their width) can be used. However, they'll need a lot of work to make them straight and flat enough for gluing-up.

I should mention that nearly all boards are a little warped. And you're seldom going to find perfect color and grain. So there's usually compromise involved when looking for lumber that's easily cut straight and flat.

PREPARING WOOD

QUESTION: *Once I've got the wood, how do I prepare it for edge-gluing?*

The first thing I do is... nothing. If I'm going to be making panels, I buy the wood early enough that it can sit in the shop for a couple weeks. This lets the moisture content in the wood adjust to the conditions in the shop.

ROUGH CUTTING. After the wood has been sitting for awhile, you can begin preparations. Start by cutting your boards to rough length, about 3" longer than finished length. I do this for a couple reasons.

First, if you're jointing the edges of the board on a jointer or planing them on a planer, there might be a snipe (a slightly deeper cut) at the end of the board. Also, when gluing up several boards, it's nearly impossible to keep the ends aligned.

Finally, if the wood splits or the joint opens up, it's almost always at the ends. By using boards that are about 3" longer than finished length, you can cut out any of these problems after the panel is glued-up.

QUESTION: *Does it matter how wide I make the finished boards for my panels?*

As a rough rule of thumb, I usually rip all of the boards I'm gluing together to between 3" and 5" wide. If the boards are any wider than 5", they're more likely to cup, even after they're glued up into the panel.

ROUGH RIPPING. I don't start out by ripping the individual boards to finished width. Instead I rip them about ¼" oversize. This gives a little extra room to work the edges smooth, straight, and perpendicular to the face sides, see opposite page. And the extra width gives you a little insurance when it comes time to trim the finished panel to width.

QUESTION: *What's the best way to rip a straight edge on a crooked board?*

I use a straight-line ripping jig on the table saw. The jig is simply a 12"-wide, ¾"-thick plywood "sled." The stock can be either securely clamped to the sled, tacked down on the ends, or held in place with double-sided carpet tape.

USING THE JIG. To use the jig, attach the stock to the sled so an edge extends over *one* edge of the sled, see Fig. 1. Then set the rip fence 12" from the saw blade (the same width as the sled). Now, to rip the edge straight, simply push the sled and stock through the saw.

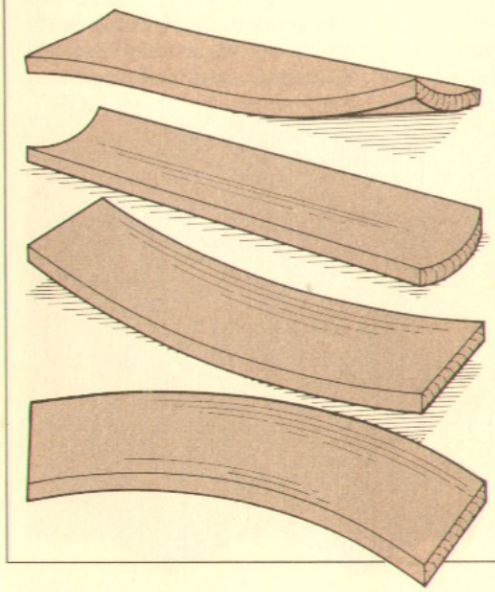

◄ *TWIST – It's nearly impossible to make a flat board out of one that's badly twisted. At best, after planing down the corners and thicknessing, you'll have a very thin board.*

◄ *CUP – A board that's cupped can be ripped into narrower boards and then planed flat on a jointer in a series of light passes. This leaves thin but usable stock.*

◄ *BOW – Bowed boards are difficult to glue into panels. But if the bow isn't too severe, flatten the board by pressing down on the "hump" as you tighten the clamps.*

◄ *CROOK – If the crook is severe, you'll have to rip the board to get it straight. But beware, ripping may release more internal pressure and the board may crook again.*

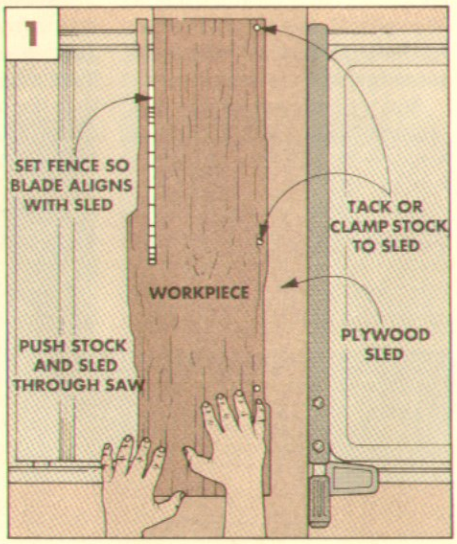

PREPARING THE EDGE

An edge that is properly prepared for gluing has three characteristics — it's straight, 90° to both faces of the board, and smooth.

Here's why. Straight edges make strong joints. But a wavy edge creates an uneven glue line where some of the joint is starved for glue and some has too much. Too little or too much glue can result in a weak joint.

An edge needs to be 90° to the faces so the panel will glue up flat. There's nothing more frustrating than discovering that the angle isn't quite 90° after you've applied the glue and started to tighten down the clamps. As the pressure is applied, the boards slide apart or they won't stay flat in the clamps.

Finally, mating edges need to be smooth so the glue can bond properly. When the edges are rough, the glue bonds to the raised fibers, and then the fibers can tear loose if the joint is stressed. (For more on glue joint failure, see Talking Shop, page 26.)

HAND PLANE

So how do you make a straight, smooth edge? Traditionally, a long hand plane called a jointer was the tool of choice. ("Jointing" is the process of preparing one board or edge to be joined to another.)

A jointer plane has a long sole, usually well over 20". So as it's passed over a wavy edge the plane iron (blade) only cuts off the high spots. (A shorter plane will ride along the wavy edge and won't provide a flat surface.)

QUESTION: *I can make a flat edge with a hand plane, but why isn't it 90° to the face?*

If the original edge was 90° to the face, then the cutting edge of the plane iron may not be adjusted parallel with the sole of the plane. If it's not parallel, the iron cuts at an angle.

Or if the original edge wasn't 90° to the face, you may be straightening the edge as you plane, but the edge remains at the same angle to the face.

One trick to getting a good fit between two mating edges is to plane both edges at the same time. To do this, tighten both boards into a vise with the mating edges up and face side of the boards out, see Fig. 2. Now plane both boards at the same time. Any variation from 90° on one edge is cancelled out by the variation on the other edge, see Fig. 2a.

JOINTER

Certainly the best tool for the job today is a sharp, well-adjusted power jointer. It's designed to produce smooth, straight edges at a set angle to the face side of the board.

CHIPOUT. One of the biggest problems with a jointer is chipout. To avoid chipout along the edge, feed the work so the grain on the face of the board points down and toward the back end of the board, see Fig. 3a. Then the knives will pull the fibers down and out of the workpiece rather than dig up into it.

QUESTION: *Which way do I feed the board if the grain is wavy or switches direction around a knot?*

This is probably the toughest question when jointing. First of all, make sure the knives on your jointer are sharp. Then set the jointer to plane off 1/32" or less. Now with the majority of the grain facing down and back, feed the workpiece at a slow, steady pace.

TABLE SAW

QUESTION: *Is there some technique for getting a really good edge on a table saw?*

For a long time, a table saw was all I ever used. In fact, with a sharp blade and a well-adjusted saw, you may never need a jointer.

The technique for jointing on the table saw is simple. But before trying this, check to be sure the blade is clean, 90° to the table, and parallel with the rip fence. I use a sharp 40-tooth carbide-tipped combination blade.

SKIM CUT. To get a smooth edge, I use a skim cut technique. Start by ripping the edge about 1/16" oversize. Then rip the edge a second time, taking only half the thickness of the blade off the edge, see Fig. 4a.

QUESTION: *What's the best way to determine if an edge is properly jointed?*

One way to check is to place the edge on something that you know is straight and flat, like your saw table. If there's a light behind the workpiece, it will show under any gaps.

But the best method is to place the mating edges together, and put the boards on a flat surface. Any gaps will show along the joint.

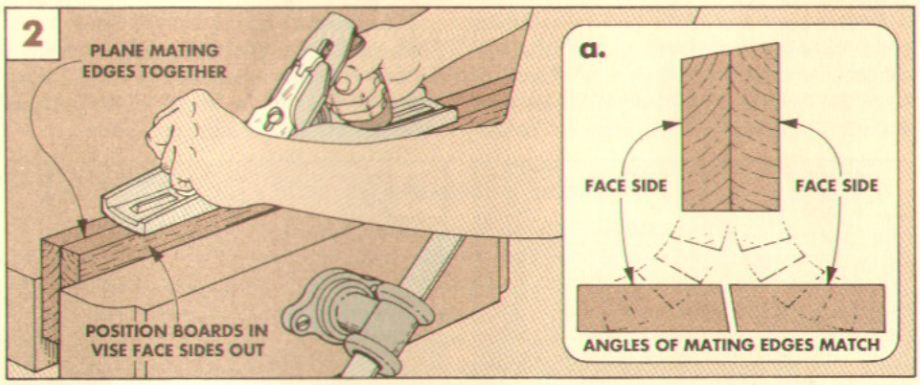

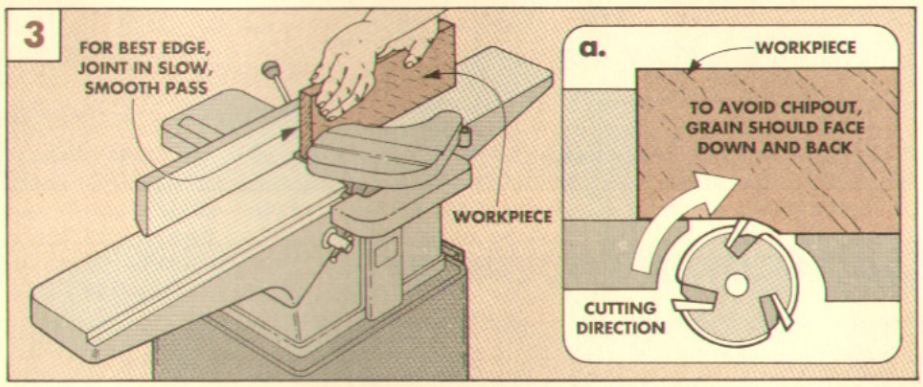

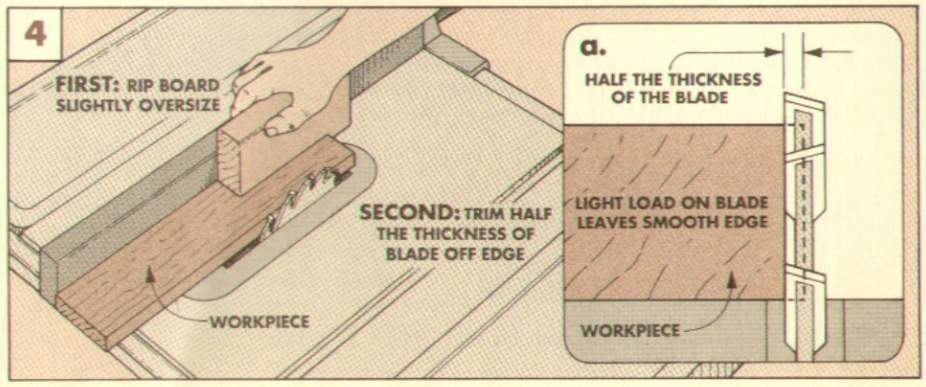

EDGE JOINTING WITH A ROUTER

■ There are several ways you can use a router to cut a straight, smooth glue edge. The first way involves using your router table like a jointer, see Fig. 5.

ROUTER TABLE

A jointer has separate infeed and outfeed tables that are offset from each other. To create the same effect on the router table, I attached a piece of plastic laminate (Formica) to the left (outfeed) side of the router table fence. The router bit removes stock like the knives of a jointer, and the laminate supports the newly-cut edge.

I used double-sided carpet tape to attach the 1/16"-thick plastic laminate to the fence. Mount it so one end aligns with the bit opening in the fence, see Fig. 5. Then file a slight bevel on the edge of the laminate by the opening so it won't catch the leading corner of the workpiece, see Fig. 5a.

Next mount a straight bit in the router table. (If your router will accept it, a 1/2"-shank bit works better than a 1/4"-shank bit since the thicker shank helps cut down on vibration.) Then adjust the fence so the surface of the laminate is aligned with the outermost edge of the bit, see Fig. 5a.

Now turn on the router and pass the workpiece over the bit from right to left. For the best edge, do this in a smooth, non-stop pass.

This method has a couple limitations. First, the thickness of the stock to be jointed is limited to the length of the bit's cutting edge. Also, since the length of the fence is short, it's difficult to joint long pieces.

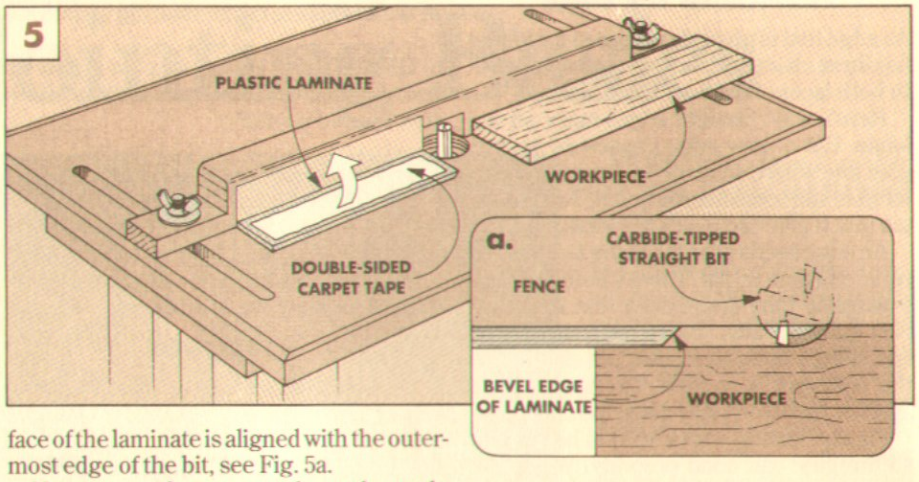

HAND-HELD ROUTER

You can also use a hand-held router and a straightedge fence to trim a small amount off the edge of a board, see Figs. 6 and 7.

FENCE. To trim with a fence, I like to use a 3/4" straight bit, see Fig. 6. A large bit vibrates less than a smaller bit, so it makes a better edge. Start by clamping a straightedge fence to the workpiece to guide the router. Then adjust the fence so the bit trims about 1/16" off the edge. Note: To avoid an uneven edge, hold the same part of the router base against the fence for the length of the cut.

FLUSH TRIM BIT. Another way to joint with a hand-held router is to trim the edge with a flush trim bit. Since most flush trim bits have a bearing on the bottom of the bit, the fence has to be clamped to the bottom side of the workpiece while the router rides on the top, see Fig. 7.

To trim the edge, align the straightedge fence with the edge of the workpiece. For the smoothest edge, trim off 1/16" or less (to minimize bit vibration).

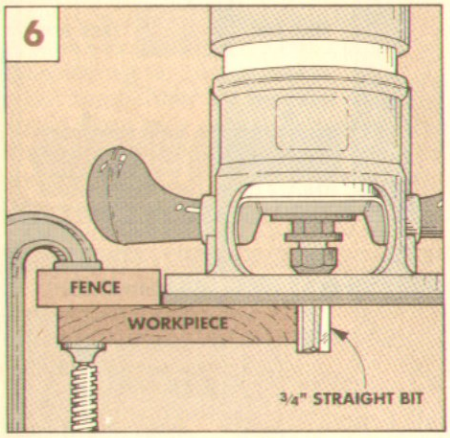

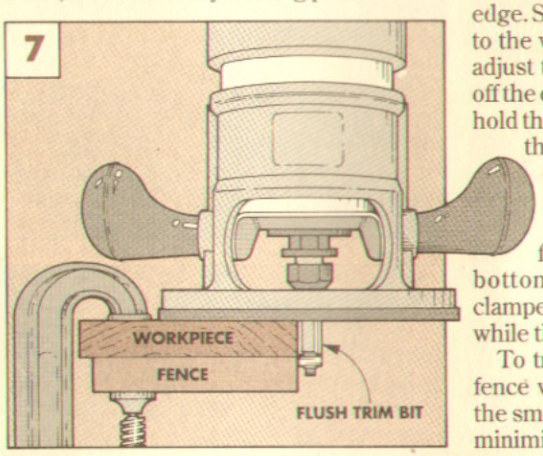

EDGE-GLUING ROUTER BIT

■ Another way to use a router for preparing stock for edge-gluing is to cut tongue and groove joints in the mating pieces. The extra gluing surface makes a strong joint. And the joint keeps the stock aligned while gluing.

But making tongue and groove joints can be time consuming. The traditional method is to use two router bits, and that can take a lot of time to set up. But there's an alternative — using an edge-gluing bit that joints and shapes the edges in one pass, see photo.

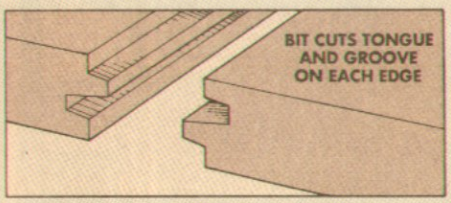

You only need one bit because it cuts a tongue and a groove on both mating edges, see drawing. The edge of one board is cut with the face side up. Then the mating edge on a second board is cut face side down.

LIMITATIONS. Although these bits cut perfectly matched edges, they do have some limitations. First, the bits cut a limited range of stock thicknesses. The bit in the photo, for example, cuts only 1/2" to 1"-thick stock.

Also, the bit can be tricky to set up. It has to be exactly centered on the thickness of the stock to get a smooth panel.

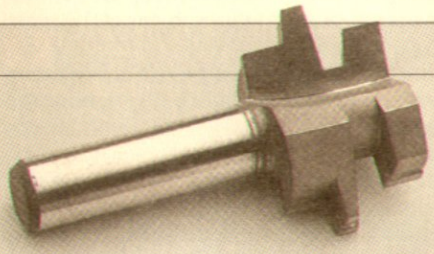

Another limitation is personal: I don't like the zig-zag look on the ends of my projects. So I wouldn't use this bit in making a panel with exposed ends. Or for making raised panels because the zig-zag joint would be seen on the beveled surfaces. But I'd use it for panels with hidden ends, such as framed panels or those with breadboard ends.

For sources of this bit, see Alternate Catalog Sources on the opposite page.

Sources

NIGHT STAND

Woodsmith Project Supplies is offering a hardware kit for the Night Stand on page 6.

We used General Finishes' Two-Step System to finish the Night Stand (see the section on Finishes, below).

Night Stand

776-100 Night Stand Hardware Kit $19.95

- (3) Solid Brass Drawer Pulls, with Ceramic Rosettes, Includes Mounting Hardware, 2½" Bore
- (3) Plastic Turnbuttons (for use as drawer stops)
- 8 Feet of Glide Strip, self-adhering, pressure-sensitive plastic, ½"-wide

GLIDE STRIP. The self-adhering glide strip is available separately. It's sold by the foot.

753-109 Plastic Glide Strip, ½" wide .....$0.50 per ft.

DESK PICTURE FRAME

For the Desk Picture Frame shown on page 12, we used ⅛" plywood for the backing board. This plywood (sometimes called aircraft plywood) is available at hobby shops and the Alternate Catalog Sources listed below.

V-GROOVE BIT. We used a V-groove bit to make the picture frame. It's available from many sources, (see Alternate Catalog Sources listed below) or from **Woodsmith Project Supplies.** This is a high-quality carbide-tipped bit with a ¼" shank.

V-Groove Bit

744-450 V-Groove Bit .. $23.95

COUNTERSINK. To make the variation of the picture frame shown at the bottom of page 15, we used a ½" plug cutter and a special countersink bit (No. C8) made by W.L. Fuller Co. The plug cutter and countersink are available from the Alternate Catalog Sources listed below.

The countersink is also available from **Woodsmith Project Supplies**. It's actually part of a complete bit set for drilling pilot and shank holes as well as countersinks and counterbores for No. 8 screws.

Pilot Bit Set

756-410 Pilot Bit Set for No. 8 Screws $15.95

- (1) 11/64" Brad Point Bit for Shank Holes
- (1) ⅛" Twist Bit for Standard Screws
- (1) 7/64" Twist Bit for Lo-Root Screws
- (1) ⅜" Countersink/Counterbore
- (1) Depth Collar
- (1) Allen Wrench

SHOP STOOL

Hardwood dowels for the legs and stretchers of the Shop Stool shown on page 18 may be available from a local lumber yard, home center, or retail woodworking store. But you might have some trouble finding the correct size (1¼" for the legs and ⅞" for the stretchers) and wood type needed for this project. We used red oak dowels. These are available from the Alternate Catalog Sources listed below or **Woodsmith Project Supplies.**

To finish the Shop Stool we used General Finishes' Two-Step System (see section on Finishes below).

Shop Stool

776-200 Shop Stool Dowel Kit $24.95

- (4) 1¼" Dia. by 36"-Long Red Oak Dowels (for legs)
- (2) ⅞" Dia. x 36"-Long Red Oak Dowels (enough for all four stretchers)

FINISHES

For both the Night Stand and the Shop Stool we used General Finishes' products. They're tung oil and urethane combinations that can be rubbed on with a cloth. This makes it easy to apply to the moldings of the Night Stand and the dowels in the Shop Stool.

General Finishes is a two-step system. The first step is a clear tung oil sealer called Sealacell. After the sealer dries, the surface should be lightly rubbed with steel wool. Then the oil and urethane top coat can be added.

On the Night Stand, we used General Finishes' Royal Finish as the top coat. This left a beautiful satin finish. We wanted more durability for the Stool and used General Finishes' Arm-R-Seal. This is a heavy-duty finish.

One pint of each is enough to finish the Night Stand or Shop Stool. **Woodsmith Project Supplies** is offering both pints and quarts.

Sealacell Sealer (Clear)

761-501.....$5.95 Pint
761-601.....$9.50 Quart

Royal Finish Oil and Urethane Top Coat (Satin)

761-502.....$6.45 Pint
761-602.....$9.95 Quart

Arm-R-Seal Oil and Urethane Top Coat (Satin)

761-520.....$6.45 Pint
761-620.....$9.95 Quart

TABLE SAW INSERTS

In Talking Shop (page 27) we talked about using phenolic plastic to make a "zero-clearance" insert for your table saw.

Woodsmith Project Supplies is offering 5" x 15" blanks of phenolic that you can cut to fit the insert opening in your table saw. The blanks are available in three thicknesses, so measure your table saw before ordering to find out the nearest thickness. Instructions are included on cutting the insert to fit the shape and depth of your saw's opening.

Phenolic Insert Blanks

776-310 ⅛" Phenolic $6.95
776-320 3/16" Phenolic.... $8.95
776-330 ½" Phenolic ... $12.95

ORDER INFORMATION

BY MAIL

To order by mail, use the form enclosed with a current issue. The order form includes information on handling and shipping charges, and sales tax. Send your mail order to:

Woodsmith Project Supplies
P.O. Box 10350
Des Moines, IA 50306

BY PHONE

For fastest service use our Toll Free order line. Open Monday through Friday, 8:00 AM to 5:00 PM Central Time.

Before calling, have your VISA, Master Card, or Discover Card ready.

1-800-444-7002

Note: Prices subject to change after October, 1991.

ALTERNATE CATALOG SOURCES

Similar hardware and supplies may be found in the following catalogs. Please call each company for a catalog or information.

Constantine's
800–223–8087
Pulls, Countersinks, Plug Cutters, ⅛" Plywood

Craftsman Wood Service
800–543–9367
Pulls, Countersinks, Plug Cutters, ⅛" Plywood

Grizzly Imports, Inc.
800–541–5537
Countersinks, Gluing & Router Bits

Leichtung Workshops
800–321–6840
Plug Cutters, Countersinks, Router Bits

Meisel Hardware
800–441–9870
Glide Strip, ⅛" Plywood

Midwest Dowel Works
513–574–8488
⅞" & 1¼" Dowels

Woodcraft
800–225–1153
Plug Cutters, Countersinks, Gluing Bits

Woodworker's Supply of New Mexico
800–645–9292
Plug Cutters, Countersinks, Dowels, Table Saw Inserts, Gluing Bits

Shopsmith, Inc.
800–543–7586
Plug Cutters, Countersinks, Table Saw Inserts

Trendlines
800–767–9999
Plug Cutters, Countersinks, Dowels, Gluing Bits

MLCS, Ltd.
800–533–9298
Gluing & Router Bits

The Woodworkers' Store
612–428–2199
Pulls, Turnbuttons, Plug Cutters, Countersinks, ⅛" Plywood, Dowels, Finishes

Final Details

Desk Picture Frame

▲ *By gluing thin wood strips to a base frame, you get the look of layered veneer. The corner squares can be of the same wood — or a contrasting one.*

Cherry Night Stand

▲ *This Cherry Night Stand is designed and built with classic frame-and-panel construction to look great alongside a guest bed or an easy chair.*

Oak Stool

▲ *Wedged-tenon joints in solid oak make a sturdy and decorative stool. A scooped-out seat and angled legs make it comfortable, but challenging.*

Night Stand Details

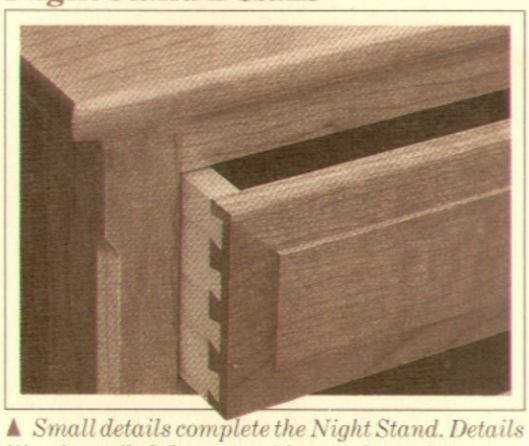

▲ *Small details complete the Night Stand. Details like dovetailed drawers with raised panel fronts, a bullnose-edge top, and chamfered front corners.*